# Level 1A HMA Plant Production Specialist

## TABLE OF CONTENTS

**HMAC CERTIFIED SPECIALIST & APPLICANTS FOR CERTIFICATION:**
**RIGHTS AND RESPONSIBILITIES**

This agreement (the "Agreement") affirms that, _____, the below Applicant for Certification or the current Certified Specialist (collectively, the "Specialist") seeks to meet or has successfully met the requirements for certification by the Texas Asphalt Pavement Association ("TXAPA"), a/k/a the Hot Mix Asphalt Center (HMAC) as a certified technician. In that connection, the Specialist agrees as follows:

***RIGHTS AND RESPONSIBILITIES -*** HMAC certification includes the exclusive right to perform certified sampling, testing and reporting on Texas Department of Transportation (TxDOT) projects involving Hot Mix Asphalt (HMA) and Soils & Base (SB) in accordance with TxDOT specifications and test procedures (as may be amended by TxDOT from time to time) for the level of certification issued. Specialists are required to perform and report test results with the accuracy and precision required of a certificated HMA or SB Specialist. It is important that the Specialist fully understands the significance of performing these duties in accordance with the certification level received by the Specialist.

Each Specialist is responsible for performing their own independent sampling, testing and reporting in accordance with TxDOT specifications, test procedures and standard operating procedures. These duties must be performed in a diligent and professional manner to produce TxDOT projects of the highest possible quality.

***CONTACT INFORMATION*** - It is the Specialist's responsibility to provide the HMAC with current contact information by logging into www.txhmac.org, Communications from the HMAC will primarily be sent electronically to the most recent contact information provided by the Specialist.

***ANNUAL PROFICIENCY*** - Once certified, Specialists are required to complete annual proficiency testing and the reporting of results to the HMAC. The testing and reporting must be timely and independently performed by the Specialist and, where applicable, in conformance with the requirements of the Specialist's certifications. TxDOT will ship the annual proficiency samples to the Specialist's address of record. (If this address is not current, the Specialist may not timely receive a proficiency sample and his/her certification may be danger of lapsing.)

Failure to submit proficiency test results or to respond to low rating(s) by the appointed deadlines may result in a change of certification status from active to inactive. Specialists whose certifications are inactivated because their annual proficiency testing/reporting is not current or whose certifications have been revoked or inactivated are prohibited from performing the duties associated with all certifications held by that Specialist.

***RECERTIFICATION*** - Certification(s) are valid for three (3) years from the date originally issued, after which the Specialist must be recertified by again passing the requirements for certification. Specialists may seek recertification up to one year prior to the expiration of their certificate(s).

Failure to timely obtain recertification will cause all dependent certifications held by a Specialist to be inactivated. It is the Specialist's responsibility to maintain an active certification(s). (The HMAC will not provide reminders of pending expiration dates.)

***ALLEGATIONS OF MISCONDUCT*** - Allegations of misconduct should be submitted to the HMAC, P.O. Box 149, Buda, TX 78610 and must include the name, address and signature of the individual asserting the allegations as well as a brief description of the allegations.

If the allegations are properly submitted and appear to have merit, the HMAC Steering Committee (the "Committee") the individual asserting misfeasance and the person so accused will be asked to meet in person (but at separate dates/times) with members of the Committee. At the conclusion of the meeting(s), the Committee will issue its determination.

Misconduct generally consists of (i) neglect, (ii) abuse and/or (iii) breach of trust which are generally defined as:

1. Neglect: unintentional deviation(s) from specifications or testing procedures;

2. Abuse: careless or deliberate deviation from specifications or testing procedures; and

3. Breach of Trust: violation of the trust placed in Certified Specialists including, but not limited to, acts such as:

    a. Falsification of or deliberate omission from material records or information; or

    b. Awareness of improprieties in sampling, testing and/or production by others and the failure to timely report those improprieties to the appropriate project supervision.

The Committee may issue written reprimands (private or public) and/or revoke or inactivate a certification (if the Specialist has made a false representation or misstatement to the Committee or to the public or has engaged in misconduct) or take such other actions as the Committee, in its sole discretion, determines to be appropriate with respect to the Specialist's certification(s).

Specialists who do not achieve recertification or whose certification is revoked or inactivated by the Committee may appeal to a separate appeals committee comprised of industry members (the "Appeal Committee"). The exhaustion of this right of appeal to the Appeal Committee is a prerequisite to the exclusive remedy of administrative review by final and binding arbitration in Hays County, Texas, as administered by the American Arbitration Association by a single-member panel. Any and all other claims related in any way to this Agreement are exclusively subject to final and binding arbitration in Hays County, Texas as administered by the American Arbitration Association by a single-member panel.

In consideration for the HMAC certification/recertification process, Specialist hereby waives any and all claims of whatsoever kind or character related, directly or indirectly, to this Agreement, against the TXAPA, HMAC (including, but not limited to, the Committee and the Appeal Committee and their members), that s/he may have (including claims for attorney's fees) and further agrees to save, indemnify and hold TXAPA, the HMAC (including, but not limited to, the Committee and the Appeal Committee and their members) harmless from any claim, action or cause of action arising as a result of, or relating to this Agreement including, but not limited to, Specialist's certification, or any refusal, reprimand, revocation and/or suspension of certification or recertification of Specialist.

**ACKNOWLEGED & AGREED:**

**SPECIALIST:**

_____ _____

**SIGNATURE** **DATE**

_____

**PRINTED NAME**

# WEBSITE

**IT IS YOUR RESPONSIBILITY TO KEEP YOUR INFORMATION UP TO DATE**





# FIRST TIME LOGIN

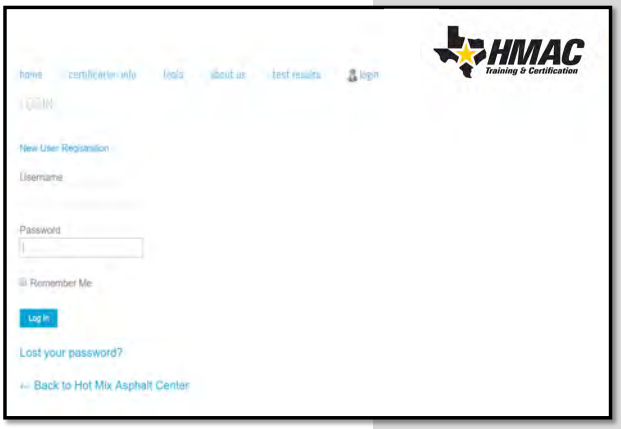


- Username: Capitalize the **FIRST LETTER OF YOUR FIRST AND LAST NAME** then spell out the rest of your last name in lower case, followed by the last 4 digits of your SSN.
- Password: The same but add a "+" at the end.

Example: **John Doe**
Username: **JDoe1234**
Password: **JDoe1234+**

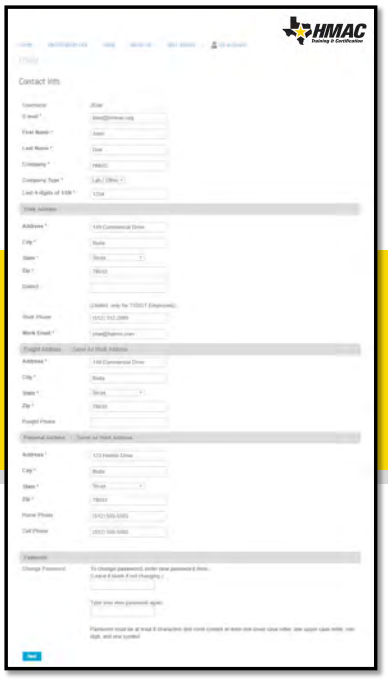

# UPDATE ALL YOUR INFORMATION





# USER PAGE

VIEW/PRINT CERTIFICATIONS

PROFICIENCY

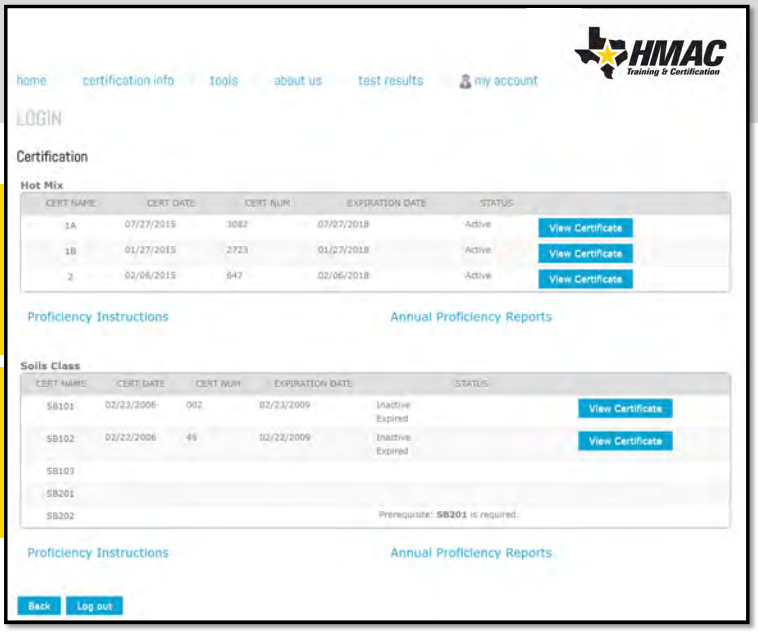

**Test Procedure for**

# SIEVE ANALYSIS OF FINE AND COARSE AGGREGATES

## TxDOT Designation: Tex-200-F

***Effective Date: January 2020***

## 1. SCOPE

1.1 Use this test method to determine the particle size distribution of aggregate samples, using standard U.S. sieves with square openings.

1.2 Use Part I to determine a weight-based, dry-sieve analysis for an aggregate sample.

1.3 Use Part II to determine a weight-based, sieve analysis for an aggregate sample requiring a washed sieve analysis.

1.4 Use Part III to determine a volume-based, sieve analysis for an aggregate sample. Perform a volumetric sieve analysis when aggregates with differences in bulk specific gravity greater than 0.3 are blended.

1.5 Use Part IV to determine the precise data relating to aggregate compounds in which some percentage of the total volume includes material that is lighter than water or the usual suspension medium.

1.6 The values given in parentheses (if provided) are not standard and may not be exact mathematical conversions. Use each system of units separately. Combining values from the two systems may result in nonconformance with the standard.

## 2. APPARATUS

2.1 *Sample splitter, quartering machine, quartering cloth, or shovel and a smooth surface.*

2.2 *Set of standard U. S. sieves*, meeting the requirements of Tex-907-K.

2.3 *Mechanical sieve shaker.*

2.4 *Balance*, Class G2 in accordance with Tex-901-K, minimum capacity of 10,000 g.

2.5 *Drying oven*, capable of attaining a temperature of at least 225°F (107°C).

2.6 *Various pans.*

2.7 *Scoop.*

2.8 *Brass wire brush.*

2.9 *Bristle brush.*

## 3. PREPARING MATERIAL SAMPLE

3.1 Follow this method to prepare aggregate that has been sampled from a stockpile.

**Note 1**—This sample preparation method is not applicable when performing a sieve analysis on material obtained from an ignition oven or extraction sample.

3.2 Place a representative sample of processed aggregate in oven and dry to constant weight at a minimum temperature of 225°F (107°C).

3.2.1 For field testing of portland cement concrete aggregate, it is not necessary to completely dry, but merely to surface dry, the coarse aggregate.

3.2.2 Dry limestone rock asphalt (LRA) samples at 140 ± 9°F (60 ± 5°C).

**Note 2**—For control testing, where rapid results are desired, it is not necessary to dry LRA aggregate.

3.3 For coarse materials (major portion retained on the No. 8 [2.36 mm] sieve), quarter the sample to the required size as shown in Table 1 using one of the following methods:

- sample splitter,
- quartering cloth,
- quartering machine, or
- mix on a smooth clean surface with a large flat scoop or shovel until blended, and quarter with a straight edge.

3.4 For fine materials (major portion passing No. 8 [2.36 mm] sieve) thoroughly blend sample and take small portions from several places in the pan to make up a test sample with the required size as shown in Table 1.

3.5 For control testing, create the test sample for all size aggregates by blending small portions taken from several places in the pan.

3.6 For plant control testing, weigh aggregates in the same proportions as used in the bituminous mixture being produced, then combine and sieve to yield the combined aggregate gradation.

3.7 Reverse Sections 3.2–3.6 when this proves more practical.

**Table 1—Minimum Size of Samples**

| Nominal Maximum Aggregate Size[1] | Minimum Weight of Field Sample, g (lb.) | Minimum Weight of Sample for Test, g (lb.) |
|---|---|---|
| **Fine Aggregate** | | |
| No. 8 (2.36 mm) | 4500 (10) | 500 (1.1) |
| No. 4 (4.75 mm) | 4500 (10) | 500 (1.1) |
| **Coarse Aggregate** | | |
| 3/8 in. (9.75 mm) | 4500 (10) | 1000 (2) |
| 1/2 in. (12.5 mm) | 4500 (10) | 1500 (3) |
| 3/4 in. (19.0 mm) | 4500 (10) | 2000 (4) |
| 1 in. (25.0 mm) | 6800 (15) | 3000 (6) |
| 1-1/2 in. (37.5 mm) | 9000 (20) | 4000 (8) |

1. Nominal maximum aggregate size is one sieve size large than the first sieve that retains more than 10% of the total aggregate.

# PART I—DRY SIEVE ANALYSIS (BASED ON WEIGHT)

## 4. PROCEDURE

4.1 Prepare the material sample in accordance with Section 3.

4.2 Determine the mass of the total sample and record to the nearest 0.1 g as $W_T$ in Section 6.

4.3 Using the sieve sizes required by the specification, arrange the set of sieves in descending order with the largest size on top.

4.4 When using a mechanical sieve shaker, place the set of sieves onto a pan and place into the shaker. When no mechanical shaker is available and hand sieving only, proceed to Section 5.5.

4.4.1 Pour the prepared aggregate into the top sieve. Establish a shaking time for different types of aggregates that will assure proper sieving of the material without degradation.

4.4.2 Cover the stack of sieves and pan, and shake the sample for at least 5 minutes.

4.4.3 It may be necessary to establish a shaking time for different types of aggregates to assure proper sieving of the material without degradation.

4.4.4 Begin with the largest sieve size and progress toward the smaller sieves. Obtain an initial weight of the aggregate on the individual sieve and hand sieve the material retained on the sieve to refusal as indicated in Section 4.4.5.

4.4.5 Hand sieve the material by lateral and vertical motion of the sieve with a "jarring" action that keeps the material moving continuously over the surface of the sieve until no more than 1% by mass of the aggregate on any individual sieve will pass that sieve during 1 minute of continuous hand sieving. Hand manipulation of the aggregate particles without forcing them through the sieve is permitted.

4.4.6 Brush any aggregate particles clinging to each sieve and the aggregate passing the sieve into the next smaller sieve. Ensure no material is lost.

4.4.7 Determine the mass of the aggregate retained on the sieve and record to the nearest 0.1 g.

4.4.8 Repeat Sections 4.4.4 through 4.4.7 for each individual sieve of the entire sample.

4.4.9 Proceed to Section 4.6.

4.5 When hand sieving, begin with the largest sieve size and progress toward the smaller sieve sizes following the method described in Section 4.4.4 through 4.4.9.

4.6 Calculate and report the percentages to the nearest 0.1% for each sieve size as shown in Section 6 and Section 7.

4.7 Take care to prevent loss of material during the sieving operation. When there is a discrepancy of equal to or less than 0.2% between the original dry weight of the sample and the sum of the weights of the various sizes, assume this amount is particles passing the smallest size sieve and use the original weight. When the discrepancy is greater than 0.2%, check the weights of the various sizes or rerun the analysis with a new sample to correct the error.

# PART II—WASHED SIEVE ANALYSIS (WHEN SPECIFIED BASED ON WEIGHT)

## 5. PROCEDURE

5.1 Prepare the material sample in accordance with Section 3.

**Note 3**—Test a minimum of two samples from each stockpile when developing a mixture design in accordance with Tex-204-F.

5.2 Determine the mass of the total dry sample and record to the nearest 0.1 g as $W_T$ in Section 6.

5.3 Place the sample in a wash pan and completely cover with clean potable water.

5.4 Gently mix the sample with the hands to break up clay lumps and friable particles and loosen the coating of fines on the coarse aggregate.

5.5 Rinse any sample particles clinging to the hands back into the wash pan.

5.6 Soak the sample a minimum of 10 minutes. A sample that contains very high clay content may require overnight soaking. After soaking, remix the sample with the hands as noted in Section 5.4 and repeat Section 5.5.

5.7 Stack a No. 8 (2.36 mm) on a No. 200 (75 µm) sieve and place in a pan or over an open sink.

5.8 Flush the wetted sample over the stacked sieves in small batches to prevent overloading and damage to the No. 200 (75 µm) sieve.

5.9 When the material retained on the No. 8 (2.36 mm) sieve is adequately washed, remove it and place in a clean drying pan.

5.10 Continue to wash the material retained on the No. 200 (75 µm) sieve until the wash water runs clear. Then place it in the drying pan with the previously cleaned No. 8 (2.36 mm) material.

5.11 Repeat Section 5.8 through 5.10 until the entire sample is washed over the set of sieves. After the final wash, rinse the sieves over the drying pan.

5.12 After the fines have settled, decant excess water from the drying pan and dry the washed sample to a constant weight.

5.13 Determine the mass of the dried washed sample and record as $W_w$ in Section 6.

5.14 Determine the sieve analysis of the dried washed sample as described in Section 4.

5.15 Calculate and report the percentages to the nearest 0.1% for each sieve size as shown in Sections 6 and 7.

5.16 Take care to prevent loss of material during the sieving operation. When there is a discrepancy of equal to or less than 0.2% between the original dry weight of sample and the sum of the weights of the various sizes, assume this amount is particles passing the smallest size sieve and use the original weight. When the discrepancy is greater than 0.2%, check the weights of the various sizes or rerun the analysis with a new sample to correct the error.

## 6. CALCULATIONS

6.1 *Dry Sieve Analysis*—calculate the individual percent retained for each consecutive sieve using the following equation:

$$W = \left(\frac{X_1}{W_T}\right) \times 100$$

Where:

W = Individual percent retained

$X_1$ = Weight of oven dry aggregate retained on individual sieve or pan

$W_T$ = Total weight of original dry sample.

6.2 *Washed Sieve Analysis*—the calculations are the same as for dry sieve analysis, except use the following equation to determine the percent finer than the No. 200 (75 µm) sieve:

$$Pas\sin g\ No.\ 200\ (75\mu m) = \frac{(W_T - W_W)}{W_T} \times 100$$

Where:

$W_W$ = Total weight of the washed dry sample

$W_T$ = Total weight of the original dry sample.

**Note 4**—When a small amount of additional material passing the No. 200 (75 µm) sieve is produced during the dry sieve analysis performed after washing, add this weight to the passing No. 200 (75 µm) sieve before calculating the percentage passing the No. 200 (75 µm) sieve.

## 7. REPORT FORMS

7.1 Use Sieve Analysis of Non-Surface Treatment Aggregates in Excel to calculate both a dry or washed sieve analyses.

7.2 Use Sieve Analysis of Surface Treatment Aggregate in Excel to calculate the sieve analysis of aggregates for surface treatment applications.

# PART III—VOLUMETRIC SIEVE ANALYSIS

## 8. APPARATUS

8.1 Apparatus listed in Section 2, with the addition of the following items.

8.1.1 *Glass graduates*, 68 fl. oz. (2000 mL), with 0.68-fl. oz. (20-mL) graduations; and 8.45 fl. oz. (250 mL), with 0.07-fl. oz. (2-mL) graduations.

8.1.2 *Wide-mouth funnel*.

8.1.3 *Water or other appropriate liquids*.

## 9. PROCEDURE

9.1 Prepare the material sample in accordance with Section 3.

9.2 Perform the sieve analysis in accordance with Section 4.

9.3 Fill the glass graduate with water or other appropriate liquid, enough to cover entire sample.

9.4 Make an initial reading of the liquid level and record on Form CST-M-2, "Volumetric Sieve Analysis Worksheet."

9.5 Place the aggregate retained on the largest sieve size into the graduate.

**Note 5**—Begin with the finest size when preparing more absorptive materials.

9.6 Eliminate entrapped air from the graduate, particularly after adding the fine aggregate, by gently rolling the graduate or stirring the aggregate prior to taking a reading.

9.7 Read the liquid level within 20 seconds and record on the worksheet.

9.8 Prior to adding each aggregate size, re-check the liquid level reading. When it differs from the liquid level recorded for the previous aggregate size, use the new reading as the initial liquid level prior to adding the next aggregate size. The object of the procedure is to measure the volume change of the liquid for each size aggregate.

9.9 Determine the volume of each size of aggregate by subtracting the liquid reading prior to the addition of each size of aggregate from the liquid reading after the addition of each size of aggregate. Enter the result in Column 3 of the worksheet. The difference in initial and final readings will be the total volume of the aggregate.

9.10 Divide the volume of each aggregate fraction by the total aggregate volume to determine the percent retained on each sieve and enter in Column 4. This percent will be an expression of each size as a portion of the total aggregate.

9.11 Calculate the total percent retained and percent passing from the values calculated in Section 9.10.

# PART IV—VOLUMETRIC SIEVE ANALYSIS OF LIGHTWEIGHT AGGREGATE (WITH SPECIFIC GRAVITIES LIGHTER THAN WATER)

## 10. APPARATUS

10.1 Same apparatus as listed for Part III with the addition of a plunger. (See Figure 1.)

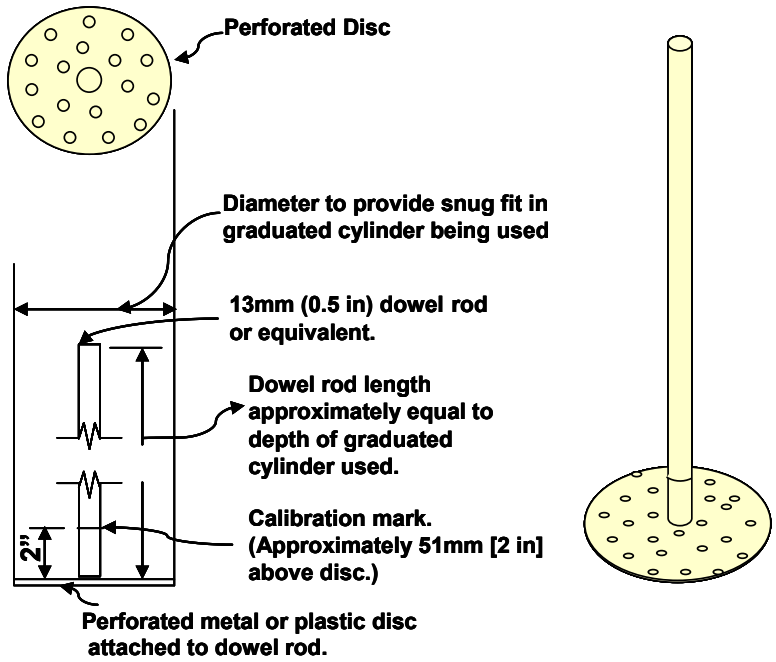


**Note: The perforation in the disc should be small enough to permit the passage of any small floating particle.**

**Figure 1**—Volumetric Sieve Analysis-Plunger—Diagram

## 11. PROCEDURE

11.1 Prepare the material sample in accordance with Section 3.

11.2 Perform the sieve analysis in accordance with Section 4.

11.3 Fill the graduate with enough water or other appropriate liquid to cover entire sample plus at least an additional 2 in. (51 mm).

**Note 6**—The additional 2 in. (51 mm) is required to ensure that the calibration mark on the plunger is submerged when taking a reading.

11.4 Slowly lower the plunger into the liquid, permitting air and liquid to percolate through the holes in the perforated disc, until the liquid level reaches the calibration mark on the plunger handle.

11.5 Trap all material beneath the plunger disc, eliminating any air prior to making readings.

11.6 With the liquid level on the calibration mark of the plunger handle, read and record the liquid level from the scale on the graduated cylinder. This is the "zero" or "initial" reading.

11.7 Remove the plunger and place the aggregate retained on the largest sieve into the graduate. Begin with the finest size when preparing more absorptive materials.

11.8 Slowly lower the plunger into the liquid until the level rises to the calibration mark on the plunger handle.

11.9 Read and record the liquid level from the calibrated scale on the graduated cylinder within 20 seconds of the aggregate being added.

11.10 Check the liquid level when ready to add the next aggregate size.

11.11 Record this as the initial reading and pour in the next sieve-size material. Make this reading within 20 seconds, in the same manner described above.

11.12 Continue this procedure for each sieve size material.

**Note 7**—Take care when lowering the plunger into the liquid so that floating particles do not slip by the edge of the plunger disc.

11.13 Make calculations in the same manner described previously under Part III, Sections 12.12–12.14.

11.14 Improve the precision of this procedure by using two graduates.

- 8.45-fl. oz. (250-mL) graduate with 0.07-fl. oz. (2-mL) graduations—The volumes of small amounts of aggregate of any given size can be measured with a greater precision in the 8.45-fl. oz. (250-mL) graduate.
- 68-fl. oz. (2000-mL) graduate with 0.68-fl. oz. (20-mL) graduations—The volumes of the larger amounts of aggregate of any given size can be measured in the 68-fl. oz. (2000-mL) graduate.

## 12. ARCHIVED VERSIONS

12.1 Archived versions are available.

# Tex-200-F, Sieve Analysis of Fine and Coarse Aggregates

| | |
|---|---|
| Original Dry Sample Weight | |
| Washed Sample Weight (Dry) | |
| Loss from Washing | |

| Sieve Size | Weight in Grams | Cumulative Wt. Retained | Cumulative % Retained | Total % Passing |
|---|---|---|---|---|
| ¾” | | | | |
| ⅜” | | | | |
| #4 | | | | |
| #8 | | | | |
| #30 | | | | |
| #50 | | | | |
| #200 | | | | |
| Pan (-200) | | | | |
| Loss for Sieving | | | | |
| Loss from Washing | | | | |
| Total -200 | | | | |
| Original Weight | | | | |

**Where:**

Loss from Sieving = Washed Sample Weight – Total Weight of all sieves and pan

Loss from Washing = Original Dry Sample Weight – Washed Sample Weight

Total -200 = Pan + Loss from Sieving + Loss from Washing

**Test Procedure for**

# COMPACTING SPECIMENS USING THE TEXAS GYRATORY COMPACTOR (TGC)

**TxDOT Designation: Tex-206-F**

***Effective Date: July 2019***

## 1. SCOPE

1.1 Use Part I of this test method to compact specimens of bituminous mixtures using a TGC or replicate model type.

1.2 Use Part II to determine the correlation factor between two or more TGCs or Superpave Gyratory Compactors (SGCs) or replicate model types.

1.3 The values given in parentheses (if provided) are not standard and may not be exact mathematical conversions. Use each system of units separately. Combining values from the two systems may result in nonconformance with the standard.

# PART I—COMPACTING SPECIMENS USING THE TGC

## 2. SCOPE

2.1 Use this procedure to properly compact specimens of bituminous mixtures using the TGC or a replicate model type.

## 3. APPARATUS

3.1 *Motorized gyratory-shear molding press,* calibrated in accordance with Tex-914-K. (See Figure 1.)

3.2 *Molding assembly*, consisting of gyratory-shear mold, base plate, and wide-mouthed funnel.

3.3 *Balance,* Class G2 in accordance with Tex-901-K, with a minimum capacity of 10,000 g.

3.4 *Oven,* capable of attaining a temperature of at least 325 ± 5°F (163 ± 3°C).

3.5 *Mercury thermometer*, marked in 5°F (3°C) divisions or less, or digital thermometer, capable of measuring the temperature specified in the test procedure.

3.6 *Sieve*, 3/4 in. (19.0 mm), when required.

3.7 *Flexible spatula*, with a blade 4 in. (100 mm) long and 0.75 in. (20 mm) wide.

3.8 *Large bent spoon.*

3.9 *Micrometer dial assembly or calipers*, capable of measuring a height of at least 2 ± 0.06 in. (50.8 ± 1.5 mm).

3.10 *Non-porous paper gaskets,* 4 in. (100 mm) in diameter.

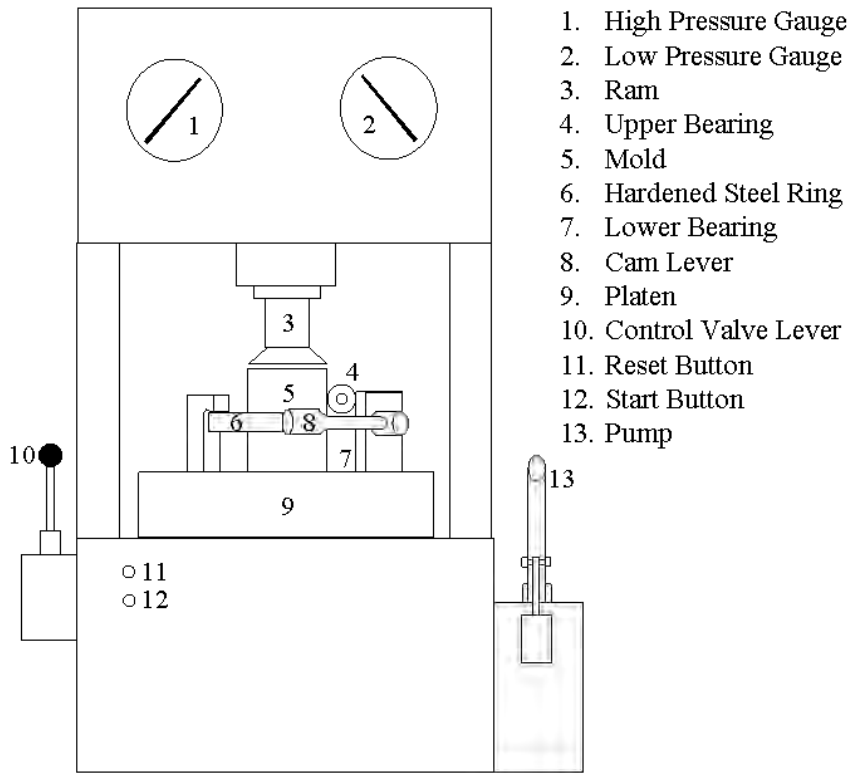


**Figure 1—**Gyratory Shear Molding Press

## 4. MIXTURE PREPARATION

4.1 For laboratory-produced mixtures, proceed to Section 4.2. For plant-produced mixtures, proceed to Section 4.3. For mixtures requiring re-heating, proceed to Section 4.4. For hot-mix cold-laid and limestone rock asphalt (LRA) mixtures, proceed to Section 4.5.

**Note 1—**Mixtures requiring re-heating are defined as plant mixtures that will be cooled to ambient temperature and be transported to another laboratory for testing.

4.2 *Laboratory-Produced Mixtures:*

4.2.1 Combine aggregates and prepare the laboratory mixture in accordance with Tex-205-F.

4.2.2 Split the mixture into the appropriate sample size.

4.2.3 Select a compaction temperature from Table 1 based on the asphalt binder specified on the plans. Use the target discharge temperature as the compaction temperature when it is less than the temperature shown in Table 1.

**Note 2**—If using reclaimed asphalt pavement (RAP) or recycled asphalt shingles (RAS) and a substitute PG binder instead of the PG binder originally specified, defer to the originally specified binder grade when selecting the compaction temperature.

4.2.4 Place the mixture in an oven at the selected compaction temperature and cure for 2 hr. ± 5 min. before molding.

4.2.5 Proceed to Section 4.6.

4.3 *Plant-Produced Mixtures:*

4.3.1 Sample the plant-produced mixture in accordance with Tex-222-F.

4.3.2 Select a compaction temperature from Table 1 based on the asphalt binder specified on the plans. Use the target discharge temperature as the compaction temperature when it is less than the temperature shown in Table 1.

**Note 3**—If using RAP or RAS and a substitute PG binder instead of the PG binder originally specified, defer to the originally specified binder grade when selecting the compaction temperature.

4.3.3 Place the mixture in an oven at the selected compaction temperature and cure for a maximum of 2 hr. before molding.

4.3.4 Proceed to Section 4.6.

4.4 *Plant-Produced or Lab-Produced Mixtures Requiring Re-Heating:*

4.4.1 For plant-produced mixtures, sample the mixture in accordance with Tex-222-F. For lab-produced mixtures, combine aggregates and prepare the laboratory mixture as described in Tex-205-F.

4.4.2 Transfer the sample to a suitable container for shipping and labeling. The sample thickness in the container must not exceed 3 in.

**Note 4** —Recommended sampling containers are paper bags or cardboard boxes.

4.4.3 Select a compaction temperature from Table 1 based on the asphalt binder specified on the plans. Use the target discharge temperature as the compaction temperature when it is less than the temperature shown in Table 1.

**Note 5** —If using RAP or RAS and a substitute PG binder instead of the PG binder originally specified, defer to the originally specified binder grade when selecting the compaction temperature.

4.4.4 Place the material into an oven at the selected compaction temperature. For pre-weighed lab or plant mix samples, proceed to Section 4.4.4.1. For shipped lab or plant mix that requires reheating, proceed to Section 4.4.4.2.

4.4.4.1 For pre-weighed lab or plant mix samples, cure the mix in the oven for 2 hr. ± 5 min. Monitor the sample mixture until it reaches the specified compaction temperature, mold the specimen, and proceed to Section 5.

4.4.4.2 When receiving shipped lab or plant mix that requires reheating, cure the mix in the oven for 1.5 hr. ± 5 min. Remove the sampled material from the containers and place it into a large pan. Thoroughly mix the sample and split into the appropriate sample size. Place the split samples back into the oven. Monitor the sample mixture until it reaches the specified compaction temperature, mold the specimen, and proceed to Section 5.

4.4.5 Proceed to Section 4.6.

4.5 *Hot-Mix Cold-Laid and LRA Mixtures:*

4.5.1 Place hot-mix cold-laid mixtures in an oven and cure to constant weight at a minimum temperature of 140°F (60°C) to remove moisture and hydrocarbon volatiles.

**Note 6**—Constant weight is the weight at which further oven drying does not alter the weight by more than 0.05% in a 2-hr. or longer drying interval in accordance with Section 9.1.

4.5.2 Place LRA mixtures in an oven and cure to constant weight at 190 ± 10°F (88 ± 5°C) with frequent stirring.

4.5.2.1 Remove LRA mixtures from the oven and let them cool down to 100 ± 5°F (38 ± 3°C) before compaction.

4.5.3 Proceed to Section 4.6.

4.6 Select a mixture weight that will yield a 2 ± 0.06-in. (50.8 ± 1.5-mm) high specimen when molded.

4.7 If the mixture contains aggregate larger than 3/4 in. (19.0 mm), remove the large aggregate using a 19 mm (3/4 in.) sieve.

**Note 7**—Use the trowel to rub the material through the sieve and scrape off as much of the fines clinging to oversize particles as possible.

4.8 For HMA mixtures, place the compaction mold and base plate in an oven at the compaction temperature selected in Table 1 for 15 ± 2 min. before compaction or at 140°F (60°C) for a minimum of 4 hr. before compaction.

4.9 For hot-mix cold-laid mixtures, place the compaction mold and base plate in an oven at 140°F (60°C) for 15 ± 2 min. before compaction.

4.10 For LRA mixtures, place the compaction mold and base plate in an oven at 100 ± 5°F (38 ± 3°C) for 15 ± 2 min. before compaction.

## 5. COMPACTION TEMPERATURES

5.1 Use the compaction temperatures in Table 1 when molding samples. Use the same temperature for both curing and compaction of HMA mixtures.

5.2 Compaction temperatures not listed in Table 1 may be used when approved by the Engineer. For guidance on materials not listed in Table 1 or materials containing modifying additives, reclaimed asphalt pavement (RAP), or recycled asphalt shingles (RAS), consult the Flexible Pavements Section of the Materials and Tests Division.

**Table 1**
**Curing and Compaction Temperatures**

| Binder[1] | Temperature, °F (°C)[2] |
|---|---|
| PG 76-16, PG 76-22, PG 70-28 | 300 (149) |
| PG 70-22, PG 64-28 | 275 (135) |
| PG 64-16, PG 64-22, PG 58-22, PG 58-28 | 250 (121) |
| Asphalt-Rubber (A-R) Binder | 300 (149) |
| Asphalt for Hot-Mix Cold-Laid mixtures | 140 (60) |
| Asphalt for LRA mixtures | 100 (38) |

*Note: Mixtures must be compacted at the selected compaction temperature within a tolerance of ± 5°F (± 3°C).*

1. If using RAP or RAS and a substitute PG binder instead of the PG binder originally specified on the plans, defer to the originally specified binder grade when selecting the compaction temperature.
2. Use the target discharge temperature when it is less than the compaction temperature shown.

## 6. PREPARATION OF THE TGC

6.1 Make certain that the platen is free to turn.

6.2 Connect the motorized TGC to an appropriate AC outlet, and push the reset and start buttons.

6.3 Allow the TGC to go through one set of gyrations.

6.4 Place a small amount of lightweight oil in the center of the motorized platen and a drop or two on the surface of the lower bearing.

**Note 8**—This is the bearing that "cocks" the mold and creates the gyratory action.

6.5 Squirt a small ring of oil around the periphery of the mold on the top surface of the hardened steel ring. This ring of oil must be in the path that the upper bearing will follow during gyration. Do not use an excessive amount of oil in making this ring.

6.6 When molding a large number of specimens, repeat Sections 6.4 and 6.5 every ten to fifteen specimens, or as appears necessary when wearing surfaces become dry.

## 7. COMPACTION PROCEDURE

7.1 Remove the mold from the oven and wipe the inside lightly with a damp rag moistened with kerosene or light lube oil.

7.2 Insert the base plate into the mold with the large diameter side up, and place a paper gasket over the base plate.

7.3 Place the mixture into the mold in one lift. Take care to avoid loss of material and segregation in the mold. After placing all of the mixture in the mold, level the mix with a bent spoon and place another paper disk on top of the leveled material.

**Note 9**—For LRA material, place the mixture into the mold in three equal lifts, taking care not to segregate the mixture. Use the bent spoon and wide-mouthed funnel to transfer the mixture into the mold.

7.4 Slide the hot mold and contents to the edge of the worktable, and with a gloved hand holding the base plate in place; transport the mold to the platen of the TGC.

7.5 Slide the mold onto the platen and center it beneath the ram of the TGC.

7.6 Move the lever on the control valve to the forward or positive position, and pump the ram down into the center of the mold.

7.7 Continue pumping until the low pressure gauge first registers 50 psi (345 kPa). It is normal for the pressure to immediately fall below 50 psi (345 kPa). Do not continue to apply pressure after the gauge has first registered 50 psi (345 kPa). No more than three min. should pass from the time the mixture is removed from the oven to the time the initial 50 psi (345 kPa) is placed on the mixture.

7.8 Immediately pull the handle of the cam-lever down to the horizontal position, cocking the mold to the proper angle of gyration. Be certain that the cam-lever is pulled all the way down. The pump handle must be all the way up.

7.9 Push the reset button, then press and hold the start button. The mold will gyrate three times and stop. Hold the start button with the left hand while holding the pump handle in the uppermost position with the right hand. Should the start button be disengaged, molding press gyrations will cease. Press the start button again to complete the three-gyration cycle. Keep hands away from the gyrating platen while in motion.

7.10 As soon as the mold stops gyrating, immediately level the mold by raising the cam-lever handle to the vertical position with the left hand while making one full stroke of the pump handle with the right hand. These must be two smooth, consecutive motions. The speed of the full stroke of the pump is important, for it serves as an endpoint for the procedure. The proper speed of pump stroke is one stroke per second.

7.11 Once again, apply pressure using the pump until the low pressure gauge first registers 50 psi (345 kPa), lower the cam-lever to the horizontal position, push the reset button, and then push and hold the start button.

7.12 During molding, when one stroke of the pump handle causes the gauge to come to rest between 50 to 150 psi (345 to 1,034 kPa), drop the pressure below 50 psi (345 kPa) by shifting the lever on the control valve to the unloading position and immediately returning it to the loading position.

7.13 Pump the pressure back to 50 psi (345 kPa). Experience reveals that the smoothest operating procedure, and certainly the safest, is for the operator to keep the right hand on the pump handle at all times. Use the left hand to operate the cam-level, the reset button, the start button, and the control valve.

7.14 Repeat Sections 7.9 through 7.13 until one smooth stroke of the pump handle, as described above, will cause the low pressure gauge to indicate a pressure of 150 psi (1,034 kPa) or more.

7.15 When one full stroke of the pump causes the low pressure gauge to indicate to 150 psi (1,034 kPa) or more, the gyrating portion of the molding procedure is complete.

7.16 At this endpoint of 150 psi (1,034 kPa), bring the pump handle down slowly until the automatic gauge protector valve cuts the low pressure gauge out of the system.

7.17 At approximately one stroke per second, pump the pressure up to 2,500 psi (17,238 kPa), as measured on the high pressure gauge.

7.18 As soon as the gauge registers 2,500 psi (17,238 kPa), stop pumping with the right hand, and with the left hand, very carefully release the pressure by slowly reversing the lever on the control valve to the backward position. Watch the large capacity gauge when releasing pressure to prevent damage to the low pressure gauge due to sudden, violent release of pressure.

7.19 Pump the ram up and out of the mold.

7.20 Slide the mold out of the TGC, remembering to place a gloved hand beneath the mold to keep the base plate from falling out.

7.21 Allow the base plate to drop out of the mold onto the worktable. Invert the mold and remove the specimen from the mold with a converted arbor press or similar device.

7.22 Measure the height of the specimen. If testing the specimen for Hveem Stability, the height must be 2 ± 0.06 in. (50.8 ± 1.5 mm). If the height is not within this tolerance, discard the specimen and mold another specimen using the weight calculated from the formula in Section 9.2.

7.23 Clean the inside of the mold with a rag lightly moistened with kerosene or light lube oil before molding another specimen. It is critical to keep the TGC clean. If dirt or grit collects on the platen or hardened steel ring, wipe it off and re-oil it before molding the next specimen.

7.24 When all the molding is complete, disconnect the TGC from the electric outlet. Clean the unpainted parts of the TGC, the mold, and the base plate with a lightly moistened kerosene rag and coat with a thin coating of lightweight oil. This cleaning and oiling is an absolute necessity if the TGC is to continue functioning properly. Wipe the painted parts of the TGC with a clean, dry rag.

## 8. TGC LUBRICATION

8.1 Remove the setscrew from the center of the platen spindle top every three mo. and fill the reservoir with high-quality S.A.E. 30 wt. hydraulic oil.

8.2 Periodically put several drops of high-quality S.A.E. 30 wt. hydraulic oil in the two oil holes of the elevating roller.

8.3 Follow the lubrication instructions on the plate attached to the end of the electric motor.

## 9. CALCULATIONS

9.1 Calculate the percent difference in weight:

$$PercentDifference = \left( \frac{InitialWeight - FinalWeight}{InitialWeight} \right) * 100$$

9.2 Calculate height adjustment:

$$\text{Required Weight (grams)} = \frac{DW}{H}$$

Where:

*D* = desired height of specimen, 2.0 in. or 50.8 mm
*W* = weight of existing molded specimen, g
*H* = height of existing molded specimen, in. or mm

# PART II—CORRELATING GYRATORY COMPACTORS

## 10. SCOPE

10.1 Use this procedure to minimize the variability of the bulk specific gravity ($G_a$) of compacted bituminous specimens between two different Texas Gyratory Compactors (TGCs) or Superpave Gyratory Compactors (SGCs).

## 11. APPARATUS

11.1 *Motorized gyratory-shear molding press,* calibrated in accordance with Tex-914-K or per manufacturer's recommendations.

11.2 *Molding assembly*, consisting of gyratory-shear mold, base plate, and wide-mouthed funnel.

11.3 *Balance*, Class G2 in accordance with Tex-901-K, with a minimum capacity of 10,000 g.

11.4 *Mercury thermometer*, marked in 5°F (3°C) divisions or less, or digital thermometer, capable of measuring the temperature specified in the test procedure.

11.5 *Sieve*, 3/4 in. (19.0 mm), when required.

11.6 *Flexible spatula*, with a blade 4 in. (100 mm) long and 0.75 in. (20 mm) wide.

11.7 *Large bent spoon.*

11.8 *Micrometer dial assembly or calipers,* capable of measuring a height of at least 2 ± 0.06 in. (50.8 ± 1.5 mm).

11.9 *Oven*, capable of attaining a temperature of at least 325 ± 5°F (163 ± 3°C).

## 12. PROCEDURE

12.1 *TGC—Two-Press Correlation:*

12.1.1 Obtain a representative sample of bituminous mixture from the plant in accordance with Tex-222-F or prepare a laboratory sample in accordance with Tex-205-F.

12.1.2 Use a minimum of 20,000 g for a two-press TGC correlation and a minimum of 30,000 g for a three-press TGC correlation.

**Note 10**—Refer to Section 12.2 for information on a three-press TGC correlation.

12.1.3 Thoroughly blend the material and take small portions from several places throughout the entire area of the pan. Use sample weights that are 1,000 ± 1 g or allow a specimen height of 2 ± 0.06 in. (50.8 ± 1.5 mm). Prepare a minimum of nine samples for each press to correlate.

12.1.4 Provide the mixture to the operator of each gyratory compactor to correlate. The same operator on the given gyratory compactor must mold all the samples in accordance with Tex-206-F, Part I.

12.1.5 Cure the samples in accordance with Tex-206-F, Part I. Handle all samples identically. This will require coordination between the operators of all gyratory compactors to be correlated. Stagger placement of samples into the oven so that they will all receive the same amount of cure time. If not molding all samples immediately, allow all samples to cool to room temperature before placing in the oven to cure.

12.1.6 Determine the $G_a$ of the molded specimens in accordance with Tex-207-F, Part I.

12.1.7 Calculate the average $G_a$ of the samples molded on each gyratory compactor in accordance with Section 13.1.

12.1.8 Subtract the average $G_a$ of the samples molded on the Contractor's gyratory compactor from the average $G_a$ of the samples molded on the Department's gyratory compactor. This is the correlation factor for the Contractor's gyratory compactor.

- Proceed to Section 12.2.4 if the factor determined from the two-press correlation is 0 ± 0.050.
- Perform a three-press correlation if the factor determined from the two-press correlation is greater than 0 ± 0.050.

12.2 *TGC—Three Press Correlation:*

12.2.1 Perform Sections 12.1.1–12.1.7 and 12.2.2–12.2.6 to correlate the Contractor and Department's gyratory compactors to the Referee gyratory compactor of MTD's Flexible Pavements Section.

12.2.2 Establish the Department's correlation factor by subtracting the average $G_a$ of the samples molded on the Department's gyratory compactor from the average $G_a$ of the samples molded on the Referee gyratory compactor.

12.2.3 Establish the Contractor's correlation factory by subtracting the average $G_a$ of the samples molded on the Contractor's gyratory compactor from the average $G_a$ of the samples molded on the Referee gyratory compactor.

12.2.4 Add this factor to the average $G_a$ for each set of specimens molded on the gyratory compactor if it is positive. Subtract this factor from the average $G_a$ for each set of specimens molded on the gyratory compactor if it is negative.

**Note 11**—Use of the correlation factor is optional if the factor is 0 ± 0.010.

12.2.5 Record the following information:

- Correlation factor,
- Date of correlation,
- Type of mix used for correlation, and
- Serial number of gyratory compactors used in correlation.

12.2.6 Determine a new correlation factor if the Contractor's or Department's gyratory compactor has to be repaired or replaced.

12.3 *SGC—Two-Press Correlation:*

12.3.1 Obtain a representative sample of bituminous mixture from the plant in accordance with Tex-222-F or prepare a laboratory sample in accordance with Tex-205-F.

12.3.2 Use a minimum of 60,000 g for a two-press SGC correlation and a minimum 90,000 g for a three-press SGC correlation.

**Note 12**—Refer to Section 12.4 for information on a three-press SGC correlation.

12.3.3 Thoroughly blend the material and take small portions from several places throughout the entire area of the pan. Use sample weights that are 4,500 ± 10 g or allow a specimen height of 115 ± 5 mm (4.5 ± 0.2 in.). Prepare a minimum of six samples for each press to correlate.

12.3.4 Provide the mixture to the operator of each gyratory compactor to correlate. The same operator on the given gyratory compactor must mold all the samples in accordance with Tex-241-F.

12.3.5 Cure the samples in accordance with Tex-241-F. Handle all samples identically. This will require coordination between the operators of all gyratory compactors to be correlated. Stagger placement of samples into the oven so that they will all receive the same amount of cure time. If not molding all samples immediately, allow all samples to cool to room temperature before placing in the oven to cure.

12.3.6 Determine the $G_a$ of the molded specimens in accordance with Tex-207-F, Part I.

12.3.7 Calculate the average $G_a$ of the samples molded on each gyratory compactor in accordance with Section 13.1.

12.3.8 Subtract the average $G_a$ of the samples molded on the Contractor's gyratory compactor from the average $G_a$ of the samples molded on the Department's gyratory compactor. This is the correlation factor for the Contractor's gyratory compactor.

- Proceed to Section 12.4.4 if the factor determined from the two-press correlation is 0 ± 0.050.
- Perform a three-press correlation if the factor determined from the two-press correlation is greater than 0 ± 0.050.

12.4 *SGC—Three-Press Correlation:*

12.4.1 Perform Sections 12.3.1–12.3.7 and 12.4.2–12.4.6 to correlate the Contractor and Department's gyratory compactors to the Referee gyratory compactor of MTS's Flexible Pavements Section.

12.4.2 Establish the Department's correlation factor by subtracting the average $G_a$ of the samples molded on the Department's gyratory compactor from the average $G_a$ of the samples molded on the Referee gyratory compactor.

12.4.3 Establish the Contractor's correlation factory by subtracting the average $G_a$ of the samples molded on the Contractor's gyratory compactor from the average $G_a$ of the samples molded on the Referee gyratory compactor.

12.4.4 Add this factor to the average $G_a$ for each set of specimens molded on the gyratory compactor if it is positive. Subtract this factor from the average $G_a$ for each set of specimens molded on the gyratory compactor if it is negative.

**Note 13**—Use of the correlation factor is optional if the factor is 0 ± 0.010.

12.4.5 Record the following information:

- Correlation factor,

- Date of correlation,
- Type of mix used for correlation, and
- Serial number of gyratory compactors used in correlation.

12.4.6 Determine a new correlation factor if the Contractor's or Department's gyratory compactor has to be repaired or replaced.

## 13. CALCULATIONS

13.1 Calculate the average $G_a$ for each TGC:

$$Avg = \frac{\sum G_a}{N}$$

Where:

*N* = number of trial samples.

## 14. EXAMPLE

14.1 Use the following example to correctly calculate and apply the TGC correlation factor for a two-press correlation. The following example may be referenced for correlating SGCs as well; however, only six specimens are required.

14.2 Results from Department TGC and Contractor TGC are shown in Tables 2 and 3.

**Table 2**
**Results from Department TGC**

| Mixture Property | Trial Specimen | | | | | | | | |
|---|---|---|---|---|---|---|---|---|---|
| | 1 | 2 | 3 | 4 | 5 | 6 | 7 | 8 | 9 |
| Dry Wt. | 999.3 | 998.2 | 999.7 | 998.7 | 999.1 | 999.5 | 998.4 | 998.8 | 997.8 |
| SSD Wt. | 999.7 | 998.9 | 1000.4 | 999.5 | 999.9 | 1000.4 | 999.3 | 999.7 | 998.8 |
| Wt. in Water | 574.6 | 575.3 | 575.6 | 576 | 576.2 | 577.2 | 574.9 | 576.1 | 575.9 |
| $G_a$ | 2.351 | 2.356 | 2.353 | 2.358 | 2.358 | 2.362 | 2.352 | 2.358 | 2.359 |

**Table 3**
**Results from Contractor TGC**

| Mixture Property | Trial Specimen | | | | | | | | |
|---|---|---|---|---|---|---|---|---|---|
| | 1 | 2 | 3 | 4 | 5 | 6 | 7 | 8 | 9 |
| Dry Wt. | 996.4 | 998.2 | 999.5 | 998.9 | 999.7 | 998.2 | 997.6 | 998.7 | 999.1 |
| SSD Wt. | 997.6 | 999.5 | 1000.7 | 999.8 | 1000.9 | 999.6 | 998.8 | 999.6 | 1000.2 |
| Wt. in Water | 573.1 | 574.1 | 573.9 | 573.4 | 574.1 | 572.9 | 571.7 | 572.9 | 573.8 |
| $G_a$ | 2.347 | 2.346 | 2.342 | 2.343 | 2.342 | 2.339 | 2.336 | 2.341 | 2.343 |

14.3 The calculated average $G_a$ is:

- Department = 2.356 and
- Contractor = 2.342.

14.4 Subtract the Contractor average from the Department average:

- 2.356 – 2.342 = 0.014, which is greater than 0.010.

14.5 Add the 0.014 to the average $G_a$ for each set of specimens molded on the Contractor's TGC.

## 15. ARCHIVED VERIONS

15.1 Archived versions are available.

**Test Procedure for**

# DETERMINING DENSITY OF COMPACTED BITUMINOUS MIXTURES

**TxDOT Designation: Tex-207-F**

***Effective Date: January 2020***

## 1. SCOPE

1.1 This test method determines the bulk specific gravity ($G_a$) of compacted bituminous mixture specimens. Use the $G_a$ of the specimens to calculate the degree of densification or percent compaction of the bituminous mixture.

1.2 Refer to Table 1 for Superpave and conventional mix nomenclature equivalents. Replace conventional nomenclature with the Superpave nomenclature when required.

**Table 1**
**Nomenclatures and Definitions**

| Nomenclatures | | Definitions |
|---|---|---|
| Conventional | Superpave | |
| AC | - | Asphalt Content |
| $A_g$ | $P_s$ | Percent by weight of aggregate in the mixture |
| $A_s$ | $P_b$ | Percent by weight of asphalt binder in the mixture |
| $G_a$ | $G_{mb}$ | Bulk specific gravity of compacted specimens |
| $G_e$ | $G_{se}$ | Effective specific gravity of the combined aggregates |
| $G_r$ | $G_{mm}$ | Theoretical maximum specific gravity |
| $G_{rc}$ | $G_{mm}$ | Theoretical maximum specific gravity corrected for water absorption during test |
| $G_s$ | $G_b$ | Specific gravity of the asphalt binder determined at 77°F (25°C) |
| $G_t$ | $G_{max\text{-}theo}$ | Calculated theoretical maximum specific gravity of the mixture at the specified AC |

1.3 The values given in parentheses (if provided) are not standard and may not be exact mathematical conversions. Use each system of units separately. Combining values from the two systems may result in nonconformance with the standard.

## 2. DEFINITIONS

2.1 *Bulk Specific Gravity ($G_a$)*—the ratio of the weight of the compacted bituminous mixture specimen to the bulk volume of the specimen.

2.2 *Percent Density or Percent Compaction*—the ratio of the actual $G_a$ of the compacted bituminous mixture specimen to the theoretical maximum specific gravity of the combined aggregate and asphalt contained in the specimen expressed as a percentage.

# PART I—BULK SPECIFIC GRAVITY OF COMPACTED BITUMINOUS MIXTURES

## 3. SCOPE

3.1 Use this procedure for all compacted bituminous mixtures, except use Part VI for mixtures with more than 2.0% water absorption.

## 4. APPARATUS

4.1 *Balance*, Class G2 in accordance with Tex-901-K, minimum capacity of 10,000 g, equipped with suitable apparatus to permit weighing the specimen while suspended in water.

4.2 *Suspension Apparatus, Non-Absorptive String, Metal Bucket, or a Cage*, attached to the balance with a metal wire or a non-absorptive string.

4.3 *Mercury Thermometer,* marked in 2°F (1°C) divisions or less, or digital thermometer, capable of measuring the temperature specified in the test procedure.

4.4 *Water Bath with a Tank Heater and Circulator,* for immersing the specimen in water while suspended, equipped with an overflow outlet for maintaining a constant water level.

4.5 *Towel,* suitable for surface drying the specimen.

4.6 *Vacuum Device,* such as Coredryer (optional).

4.7 *Measuring Device,* such as a ruler, calipers, or measuring tape.

4.8 *Drying Oven,* capable of attaining the temperature specified in the test procedure.

## 5. TEST SPECIMENS

5.1 Test specimens may be laboratory-molded mixtures or pavement cores.

5.2 Avoid distorting, bending, or cracking the specimens during and after removal from pavements or molds. Store the specimens in a cool place.

5.3 Obtain cores in accordance with Tex-251-F, Part I.

5.4 *Laboratory-Molded Specimens:*

5.4.1 Measure and record the specimen height to the nearest 1/16 in.

5.5 *Pavement Cores*

5.5.1 Prepare pavement cores for testing in accordance with Tex-251-F, Part II.

## 6. PROCEDURES

6.1 For specimens containing moisture, follow the instructions in Sections 6.2–6.9. For laboratory-molded specimens, perform the instructions in Sections 6.3–6.9.

6.2 Place the specimen in an oven with the flat side of the specimen on a flat surface to complete the drying process. Oven-dry the specimen for a minimum of two hr. at a temperature of 115 ± 5°F (46 ± 3°C) to constant weight. "Constant weight" is the weight at which further oven drying does not alter the weight by more than 0.05% in a two hr. or longer drying interval when calculated in accordance with Section 7.1.

**Note 1**—The oven drying temperature can be reduced to a temperature no lower than 100°F (38°C) provided that the specimen remains in the oven for a minimum of eight hr.

**Note 2—**As an option, for specimens not subject to further testing and evaluation, rapid dry in an oven at a temperature of 140°F (60°C), for a maximum of 12 hr. to constant weight.

**Note 3**—As an option, use a Coredryer in conjunction with or instead of a drying oven. Dry all samples to a constant weight as defined in Section 6.2.

6.3 Allow the specimen to cool, and then weigh in air to the nearest 0.1 g.

6.4 Record and designate this weight as *A* in Section 7.2.

6.5 Unplug or turn off the water circulator in the water bath while obtaining the submerged sample weight. Attach the suspension apparatus to the scale and submerge in water. Tare the scale with the suspension apparatus submerged in water.

6.6 Immerse the specimen in a water bath at 77 ± 3°F (25 ± 2°C).

6.7 Leave the sample in the water for three min. ± 15 sec. When the scale readings stabilize, record the specimen weight and designate as *C* in Section 7.2.

6.8 Remove the specimen from water. Dry the surface of the specimen by blotting gently with a damp towel for no longer than 20 sec. To facilitate drying, gently rotate the specimen while blotting, if necessary; however do not shake, sling, or perform any action that removes water from within the specimen.

6.9 Weigh the specimen in air. Record as the saturated surface dry weight (SSD) and designate as *B* in Section 7.2.

## 7. CALCULATIONS

7.1 Calculate the percent difference in weight:

$$PercentDifference = \left( \frac{InitialWeight - FinalWeight}{InitialWeight} \right) * 100$$

7.2 Calculate $G_a$ and percent of water absorbed by the specimen:

$$G_a = \frac{A}{B - C}$$

Where:
$G_a$ = bulk specific gravity,
$A$ = weight of dry specimen in air, g,
$B$ = weight of the SSD specimen in air, g, and
$C$ = weight of the specimen in water, g.

$$Percent\ absorption = \frac{B - A}{B - C} \times 100$$

Where:
$A$ = weight of dry specimen in air, g,
$B$ = weight of the SSD specimen in air, g, and
$C$ = weight of the specimen in water, g.
**Note 4**—If the percent absorption exceeds 2.0%, use Part VI.

# PART II—BULK SPECIFIC GRAVITY OF COMPACTED BITUMINOUS MIXTURES USING PARAFFIN

## 8. SCOPE

8.1 The paraffin method is no longer an accepted process.

8.2 Refer to Part VI of this test procedure for absorptive mixtures (those with more than 2.0% water absorption).

# PART III—DETERMINING IN-PLACE DENSITY OF COMPACTED BITUMINOUS MIXTURES (NUCLEAR METHOD)

## 9. SCOPE

9.1 Use this procedure to determine the in-place density of compacted bituminous mixtures using a nuclear density gauge.

## 10. APPARATUS

10.1 *Nuclear Density Gauge.*

10.2 *Portable Reference Standard.*

10.3 *Calibration Curves for the Nuclear Gauge.*

10.4 *Scraper Plate and Drill Rod Guide.*

10.5 *Drill Rod and Driver or Hammer.*

10.6 *Shovel, Sieve, Trowel, or Straightedge and Miscellaneous Hand Tools.*

10.7 *Gauge Logbook.*

## 11. STANDARDIZATION

11.1 To standardize the nuclear density gauge, turn on the apparatus and allow it to stabilize.

**Note 5**—Follow the manufacturer's recommendations to ascertain the most stable and consistent results.

11.2 Perform standardization with the apparatus located at least 25 ft. (8 m) away from other sources of radioactivity. Clear the area of large masses or other items that may affect the reference count rate.

**Note 6**—The preferred location for standardization checking is the pavement location tested. This is the best method for determining day-to-day variability in the equipment.

11.3 Take a minimum of four repetitive readings using Table 2 at the normal measurement period, and determine the average of these readings.

**Note 7**—One measurement period of four or more times the normal period is acceptable if available on the apparatus. This constitutes one standardization check.

11.4 Detect the total number of gammas during the period by determining the count per measurement period. Correct the displayed value for any prescaling built into the instrument. Record this corrected value as $N_s$.

**Note 8**—The prescale value (F) is a divisor, which reduces the actual value for the purpose of display. The manufacturer will supply this value if other than 1.0.

11.5 Use the value of $N_s$ to determine the count ratios for the current day's use of the instrument.

**Note 9**—Perform another standardization check if for any reason the measured density becomes suspect during the day's use.

11.6 Table 2 lists the required actions to take based on the results from Section 11.3.

**Table 2**
**Reference Standard**

| If . . . | Then. . . |
|---|---|
| the value obtained is within the limits stated in limits calculation | the apparatus is considered to be in satisfactory operating condition and the value may be used to determine the count ratios for the day of use. |
| the value is outside these limits | allow additional time for the apparatus to stabilize, make sure the area is clear of sources of interference, then conduct another standardization check. |
| the second standardization check is within the limits | the apparatus may be used. |
| the second standardization check also fails the test | the apparatus must be adjusted or repaired as recommended by the manufacturer. |

## 12. CALCULATIONS

12.1 Use the test results from Section 11.3 and the following calculations to determine the limit:

$$(N_s - N_o) \leq 2.0\sqrt{N_o / F}$$

Where:

$N_s$ = value of current standardization count

$N_o$ = average of the past four values of $N_s$ taken previously

$F$ = value of any prescale.

## 13. PROCEDURE

13.1 To determine the in-place density using a nuclear density gauge, select an area that is relatively free of loose material, voids, or depressions. Avoid elevating the gauge above the surface of the material to be tested.

**Note 10**—Select an area at least 12 in. (0.3 m) away from surface obstructions such as curbing, etc. It is optional to use fine sand to fill any voids or minor depressions.

13.2 Measure the density of the selected area in either the backscatter or direct transmission mode.

**Note 11**—The direct transmission method is only applicable for lifts greater than two in. (50 mm) thick.

13.3 Follow the instructions in Sections 13.3.1–13.3.2 to measure the in-place density of compacted bituminous pavements using a nuclear density gauge in the backscatter mode.

13.3.1 Firmly seat the density gauge on the selected area so it is in full contact with the surface.

13.3.2 Record the readings that are required at each location with the probe in the backscatter position. Do not leave the gauge in one position on the compacted bituminous pavement for a long time, as erratic readings may result from the hot surface. Proceed to Section 13.5.

13.4 Follow the instructions in Sections 13.4.1–13.4.4 to measure the in-place density of compacted bituminous pavements using a nuclear density gauge in the direct transmission mode.

13.4.1 Make a hole two in. (50 mm) deeper than the transmission depth used with the drive pin and guide plate.

**Note 12**—The hole must be as close as possible to 90° from the plane surface.

13.4.2 Firmly seat the density gauge on the prepared area so it is in full contact with the surface.

13.4.3 Adjust the probe to the desired transmission depth. Pull the gauge so that the probe is in contact with the side of the hole nearest the detector tubes.

13.4.4 Measure and record the readings required for each location for the particular type of gauge used. Proceed to Section 13.5.

13.5 Use one of the following methods to determine the in-place density.

13.5.1 Divide the field counts by the standard counts.

OR

13.5.2 Use the appropriate calibration curves, if necessary.

**Note 13**—Most models are now programmable to provide direct reading of the nuclear density or percent compaction.

13.6 Take cores or sections of the pavement from the same area selected for the nuclear tests when correlating the nuclear density to the actual density of the compacted material.

13.7 Measure the $G_a$ of the cores or samples taken from the selected area tested for density as described in Part I or Part VI. Establish a correlation factor using a minimum of seven core densities and seven nuclear

densities. Adjust the nuclear density readings using this correlation factor to correlate with the actual $G_a$ determined through laboratory testing.

**Note 14**—When testing thin lifts in the backscatter mode, the influence of underlying strata with varying densities may render this procedure impractical without special planning. Most manuals for the nuclear gauge describe the various methods to use with thin lifts.

13.8 Make correlations as described in Section 13.6 and compare the correlated nuclear density to the $G_r$ or $G_{rc}$ of the mixture when controlling in-place density with the nuclear gauge. Calculate the percent density or directly read from programmable models to determine air-void content.

# PART IV—ESTABLISHING ROLLER PATTERNS (CONTROL STRIP METHOD)

## 14. SCOPE

14.1 Use this procedure to establish roller patterns for bituminous pavement.

## 15. APPARATUS

15.1 *Nuclear Density Gauge.*

15.2 *Electrical Impedance (Nonnuclear) Density Measurement Gauge* (Optional).

15.3 *Portable Reference Standard.*

15.4 *Calibration Curves for the Nuclear Gauge.*

15.5 *Scraper Plate and Drill Rod Guide.*

15.6 *Drill Rod and Driver or Hammer.*

15.7 *Shovel, Sieve, Trowel, or Straightedge and Miscellaneous Hand Tools.*

15.8 *Gauge Logbook.*

## 16. PROCEDURE

16.1 To establish roller patterns (control strip method), refer to the gauge manufacturer's instructions for operating the density gauge.

**Note 15**—Standardize the equipment at the start of each day's use as described in Part III when using a nuclear density gauge.

**Note 16**—Operate electrical impedance (nonnuclear) gauges in continuous mode to ensure all data is from the location in question.

16.2 Establish a control strip approximately 300 ft. (90 m) long and at least 12 ft. (3.5 m) wide or the width of the paving machine. Select three test sites.

**Note 17—**Avoid areas near edges or overlap of successive passes of the rollers.

16.3 Allow the roller to complete a minimum of two coverages of the entire control strip before checking the density. Perform density tests at the three test sites selected. Record the results. Mark each test site very

carefully so that subsequent tests made are in the same position and location. Use a colored marker keel to outline the gauge before taking the readings. Take the tests as quickly as possible and release rollers to complete additional coverage to prevent cooling of unrolled areas.

16.4 Repeat the density tests at the previously marked test sites. Continue this process of rolling and testing until there is no significant increase in density. Try several different combinations of equipment, and numbers of passes with each combination, to determine the most effective rolling pattern.

**Note 18**—In-place density determined with roadway cores is the final measure of rolling pattern effectiveness.

16.5 Construct another section, without interruption, using the roller patterns and number of coverages determined by the control strip after completion of the control strip tests. Take random density tests on this section to verify the results from the control strip.

**Note 19**—It may be possible to reduce the required coverages based on these tests.

16.6 Make density tests for job control in accordance with the *Guide Schedule of Sampling and Testing* or as often as necessary, when some changes in the compacted material indicate the need.

## 17. NOTES

17.1 Visual observation of the surface being compacted is a very important part of this procedure. Cease rolling and get an evaluation of the roller pattern if obvious signs of distress develop, such as cracking, shoving, etc. Structural failures due to over-compaction will cause the density tests to indicate the need for more compaction. Observe closely and take particular care when using vibratory rollers, since they are more likely to produce over-compaction in the material.

17.2 Use the minimum test time allowed by the particular gauge when measuring density on hot material, since the gauge may display erratic results if overheated.

17.3 Exercise particular care to clean the bottom of the gauge after using it on asphalt pavement.

17.4 Use the correlation procedures outlined in Part III, Section 13.7 when using specified density and rolling patterns with a nuclear density gauge.

17.5 This procedure provides a general guide to establish roller patterns. Follow the manufacturer's instruction manual furnished with the particular density gauge for specific operation of that gauge. This is essential, since several different models and different brands are in standard use by the Department.

17.6 Nuclear gauges and the user of the nuclear gauges must meet all requirements of the Department's radioactive material license, "Nuclear Gauge Operating Procedures," and the *Texas Rules for Control of Radiation*.

# PART V—DETERMINING MAT SEGREGATION USING A DENSITY-TESTING GAUGE

## 18. SCOPE

18.1 Use this procedure to identify segregation in bituminous pavements after placement on the roadway using a density-testing gauge.

## 19. APPARATUS

19.1 *Nuclear Density Gauge.*

19.2 *Thin Lift Density Gauge* (Optional).

19.3 *Electrical Impedance (Nonnuclear) Measurement Gauge* (Optional).

19.4 *Measuring Tape* (Optional).

## 20. REPORT FORMS

20.1 Use Segregation Density Profile Form to identify segregation in a pavement section.

## 21. PROCEDURE

21.1 Refer to the manufacturer's instructions for operating the density gauge.

**Note 20**—It is not necessary to calibrate the gauge to the mix.

**Note 21**—Operate electrical impedance (nonnuclear) gauges in continuous mode to ensure all data is from the location in question.

21.2 Profile a 50 ft. (15 m) section of the bituminous pavement.

21.3 When profiling a location where the paver stopped for more than 60 sec., perform the instructions in Sections 21.3.1–21.3.3.

21.3.1 Identify the location where the paver stopped paving, such as sporadic mix delivery.

21.3.2 Move approximately 10 ft. (3 m) behind the location where the paver stopped paving, and mark and record this location as the beginning of the profile section.

21.3.3 Proceed to Section 21.6.

21.4 When profiling a random location, randomly select an area, and then choose an area with visible segregation, if possible. Proceed to Section 21.6.

21.5 When profiling an area with segregation of longitudinal streaking greater than the profile length, perform the instructions in Sections 21.5.1–21.5.5.

21.5.1 Profile the area at an angle in a diagonal direction.

21.5.2 Start the profile with a transverse offset of 2 ft. (0.6 m) from the center of the longitudinal streak.

21.5.3 End profile with a transverse offset of 2 ft. (0.6 m) on the opposite side of the longitudinal streak.

21.5.4 Do not start or end a profile less than 1 ft. (0.3 m) from the pavement edge.

21.5.5 Proceed to Section 21.7.

21.6 Determine the transverse offset 2 ft. (0.6 m) or more from the pavement edge. Take density readings in a longitudinal direction and do not vary from this line. Visually observe the mat and note the surface texture in

the section and the location of any visible segregated areas. Take additional readings along the transverse offset in areas with visible segregation. Include any visually segregated areas in the profile.

21.7 After completion of the final rolling patterns, position the density gauge at the identified location.

21.7.1 *Use of a Nuclear Density Gauge:*

21.7.1.1 Take three one min. readings (minimum time length, longer readings can be used) in backscatter mode when using a nuclear density gauge at each random sample location.

21.7.1.2 It is optional to use fine sand passing the No. 40 sieve size to fill any voids without elevating the gauge above the rest of the mat.

21.7.2 *Use of an Electrical Impedance Gauge:*

21.7.2.1 Take two readings; it is not necessary to move the gauge between readings.

**Note 22**—Operate electrical impedance (nonnuclear) gauges in continuous mode to ensure all data is from the location in question.

21.8 Record the in-place density gauge readings.

21.9 Average the readings before moving the density gauge. Compare each individual reading to the average. Discard any single readings that vary more than 1 pcf (16 kg/m$^3$) from the average. Take additional readings to replace the discarded readings until all the readings are within 1 pcf (16 kg/m$^3$) of the average.

21.10 Move the density gauge approximately 5 ft. (1.5 m) forward in the direction of the paving operation. Take an additional set of readings at any location with visible segregation in between the 5 ft. (1.5 m) distance.

21.11 Repeat the instructions in Sections 21.7–21.10. Complete a minimum of 10 sets of readings.

**Note 23**—Use a nuclear density gauge to verify impedance gauge readings whenever readings from an impedance gauge may not be accurate.

21.12 Determine the average density from all locations.

21.13 Determine the difference between the highest and lowest average density.

21.14 Determine the difference between the average and lowest average density.

21.15 Record the data using the Example Segregation Profile Worksheet.

# PART VI—BULK SPECIFIC GRAVITY OF COMPACTED BITUMINOUS MIXTURES USING THE VACUUM METHOD

## 22. SCOPE

22.1 Use this procedure to determine the $G_a$ of compacted bituminous mixtures using the vacuum device. This procedure is applicable for mixtures with more than 2.0% water absorption.

## 23. APPARATUS

23.1 *Specialized Vacuum Sealing Device.*

23.2 *Balance,* Class G2 in accordance with Tex-901-K, minimum capacity of 10,000 g, equipped with suitable apparatus to permit weighing of the specimen while suspended in water.

23.3 *Suspension Apparatus, Non-Absorptive String, Metal Bucket, or Cage,* attached to the balance with a metal wire or a non-absorptive string.

23.4 *Mercury Thermometer,* marked in 2°F (1°C) divisions or less, or digital thermometer, capable of measuring the temperature specified in the test procedure.

23.5 *Water Bath with a Tank Heater and Circulator,* for immersing the specimen in water while suspended from a scale, equipped with an overflow outlet for maintaining a constant water level.

23.6 *Vacuum Device,* such as Coredryer (optional).

23.7 *Measuring Device,* such as a ruler, calipers, or measuring tape.

## 24. TEST SPECIMENS

24.1 Test specimens may be laboratory-molded mixtures or pavement cores.

24.2 Avoid distorting, bending or cracking the specimens during and after removal from pavements or molds. Store the specimens in a cool place.

24.3 Obtain cores in accordance with Tex-251-F, Part I.

24.4 *Laboratory-Molded Specimens:*

24.4.1 Measure and record the specimen height to the nearest 1/16 in.

24.5 *Pavement Cores:*

24.5.1 Prepare pavement cores for testing in accordance with Tex-251-F, Part II.

## 25. MATERIALS

25.1 Use a supply of large and small-specialized polymer bags as recommended by the manufacturer.

## 26. PROCEDURES

26.1 *Vacuum Sealing Device Setup:*

26.1.1 Set the vacuum timer.

**Note 24—**The manufacturer calibrates the vacuum pump timer setting and exhaust at the factory to eliminate drift and variability due to the sealing process. The vacuum pump operates for approximately one min. Contact the manufacturer for adjustments if the vacuum pump stops before this time has elapsed.

26.1.2 Set the sealing bar timer in accordance with the vacuum device manufacturer's recommendations.

**Note 25—**Inspect the seal quality after the first sealing operation. Reduce the setting if the polymer bag stretches or burns. Increase the setting if the seal is not complete or the bag easily separates.

26.2 *Determine the $G_a$ of Compacted Bituminous Mixtures:*

26.2.1 Perform the instructions in Sections 26.2.2–26.2.3 for specimens containing moisture. Proceed to Section 26.2.4 for laboratory-molded specimens.

26.2.2 Proceed to Section 26.2.3 or, as an option, pre-dry the specimen using a Coredryer or air dry to remove excess moisture.

26.2.3 Place the specimen in an oven with the flat side of the specimen on a flat surface. Oven-dry the specimen for a minimum of two hr. at a temperature of 115 ± 5°F (46 ± 3°C) to a constant weight. "Constant weight" is the weight at which further oven drying does not alter the weight by more than 0.05% in a two hr. or longer drying interval in accordance with Section 7.1. Refer to Part I, Notes 3 and 4.

26.2.4 Allow the specimen to cool to room temperature, and then weigh in air to the nearest 0.1 g. Record and designate this weight as *A* in Section 27.1.

26.2.5 Open the lid of the vacuum device. Stack or remove rectangular spacer plates in the vacuum chamber of the vacuum device so there is adequate space for the test specimen.

26.2.6 Place a sliding plate in the vacuum chamber on top of the spacer plates away from the seal bar.

**Note 26—**Place the sliding plate in the chamber to reduce friction during the sealing operation.

26.2.7 Select and use a large or small polymer bag, as recommended by the manufacturer, to seal the specimen.

26.2.8 Weigh the selected polymer bag and record and designate this weight as *B* in Section 27.1.

26.2.9 *Determine the Polymer Bag Correction Factor (CF):*

26.2.9.1 Calculate the ratio, R, by dividing the weight of the specimen by the weight of the bag.

26.2.9.2 Use the CF Table provided in the manufacturer's operator guide.

26.2.9.3 Look up the calculated R-value and record and designate the corresponding correction factor from the table as *CF* in Section 27.1.

26.2.10 *Vacuum Seal the Specimens:*

26.2.10.1 Place the bag inside the chamber.

26.2.10.2 Place the specimen in the polymer bag, carefully avoiding puncturing or tearing the bag.

26.2.10.3 Center the core in the bag, leaving approximately 1 in. (25.4 mm) of slack on the backside.

26.2.10.4 Position the bag so that approximately 1 in. (25.4 mm) of the open end is evenly against the sealing bar.

26.2.10.5 Close the lid of the vacuum device and hold firmly for two to three sec.

**Note 27—**The vacuum pump will start, and the lid will stay closed on its own. The vacuum gauge will read less than 28 in. (50 mm) Hg.

26.2.10.6 The lid of the vacuum device will automatically open upon completion of the sealing process. Carefully remove the sealed specimen from the chamber. Gently pull on the polymer bag to ensure the seal is tightly conformed to the specimen. Return to the instructions in Section 26.2.8 if the seal is not tightly conformed to the specimen.

**Note 28—**A loose seal may be an indication of a leak.

26.2.11 Determine the type of apparatus to use to weigh the samples suspended in water.

26.2.12 Unplug or turn off the water circulator in the water bath while obtaining the submerged sample weight. Attach the apparatus to the scale and submerge in water. Tare the scale with the apparatus submerged in water.

26.2.13 Completely submerge the sealed specimen in water at 77 ± 3°F (25 ± 2°C) and record the weight of the specimen in the bag. Weigh the sealed specimen in water. Record the weight to the nearest 0.1 g when the scale reading stabilizes. Designate this weight as *C* in Section 27.1.

**Note 29—**Do not allow the polymer bag to touch the sides of the water bath.

26.2.14 Remove the specimen from the polymer bag and reweigh the specimen in air. Compare this weight to the weight recorded for *A* in Section 26.2.4. If the difference in weight is greater than 5 g, a leak may have occurred. Dry the sample to a constant weight and repeat the procedure using a new polymer bag.

26.3 Do not use the test results calculated in this test procedure using the vacuum device if this method produces a $G_a$ that is higher than the $G_a$ calculated in Part I.

**Note 30—**Use the results calculated in Part I of this method in this case.

## 27. CALCULATIONS

27.1 Calculate the $G_a$ of the compacted specimen:

$$G_a = \frac{A}{\left[\left(A+B\right)-C\right]-\frac{B}{CF}}$$

Where:

$G_a$ = bulk specific gravity,

*A* = weight of specimen in air, g,

*B* = weight of the polymer bag in air, g,

*C* = weight of sealed specimen in water, g, and

*CF* = correction factor.

# PART VII—DETERMINING LONGITUDINAL JOINT DENSITY USING A DENSITY-TESTING GAUGE

## 28. SCOPE

28.1 Use this procedure to perform a longitudinal joint density evaluation on bituminous pavement using a density-testing gauge.

## 29. APPARATUS

29.1 *Nuclear Density Gauge.*

29.2 *Thin Lift Density Gauge* (Optional).

29.3 *Electrical Impedance (Nonnuclear) Density Measurement Gauge* (Optional).

29.4 *Measuring Tape* (Optional).

## 30. FORMS

30.1 Longitudinal Joint Density Profile Form.

## 31. PROCEDURES

31.1 *Perform a Longitudinal Joint Density Using a Density-Testing Gauge:*

31.1.1 Refer to the manufacturer's instructions for operating the density gauge.

31.1.2 Identify the random sample location selected for in-place air void testing. Mark and record this location as the reference point to perform the joint evaluation.

**Note 31—**This point must be more than 2 ft. (0.6 m) from the pavement edge.

31.1.3 Position the gauge at the random sample location selected for in-place air void testing identified in Section 36.1.2 after completion of the final rolling pattern.

31.1.3.1 *Use of a Nuclear Density Gauge:*

31.1.3.1.1 Take three one min. readings (minimum time length, longer readings can be used) in backscatter mode when using a nuclear density gauge.

31.1.3.1.2 It is optional to use fine sand passing the No. 40 sieve size to fill any voids without elevating the gauge above the rest of the mat.

31.1.3.2 *Use of an Electrical Impedance Gauge:*

31.1.3.2.1 Take two readings; it is not necessary to move the gauge between readings.

**Note 32**—Operate electrical impedance (nonnuclear) gauges in continuous mode to ensure all data is from the location in question.

31.1.4 Record the density measurements from the density gauge at the random sample location selected for in-place air void testing.

31.1.5 Measure the longitudinal joint density at the right and left edge of the mat, which is or will become a longitudinal joint.

**Note 33**—Select a location that is perpendicular to the random sample location selected for in-place air void testing.

Identify the joint type as "Confined" or "Unconfined."

**Note 34**—Take additional readings along the longitudinal joint at areas with visible irregularities or segregation.

31.1.6 Position the gauge with the center placed 8 in. (200 mm) from the pavement edge that is or will become a longitudinal joint. Orient the gauge so the longer dimension of the gauge is parallel to the longitudinal joint.

31.1.6.1 *Use of a Nuclear Density Gauge:*

31.1.6.1.1 Take three one min. readings (minimum time length, longer readings can be used) in backscatter mode when using a nuclear density gauge.

31.1.6.1.2 It is optional to use fine sand passing the No. 40 sieve size to fill any voids without elevating the gauge above the rest of the mat.

31.1.6.2 *Use of an Electrical Impedance Gauge:*

31.1.6.2.1 Take two readings; it is not necessary to move the gauge between readings.

**Note 35**—Operate electrical impedance (nonnuclear) gauges in continuous mode to ensure all data is from the location in question.

31.1.7 Record the density measurements from the density gauge at the longitudinal joint.

31.1.8 Determine the difference in density between the readings taken at the random sample location selected for in-place air void testing and the readings taken at the longitudinal joint.

**Note 36**—Use a nuclear density gauge to verify impedance gauge readings whenever readings from an impedance gauge may not be accurate.

31.1.9 Record and report the data using the Example Longitudinal Joint Density Worksheet.

31.2 *Determine a Correlated Joint Density:*

31.2.1 Record the average $G_a$ of the cores taken at the random sample location selected for in-place air voids (*A*).

31.2.2 Record the $G_r$ for each sublot evaluated for joint density (*B*).

31.2.3 Record the average density gauge reading in pcf (kg/m$^3$) at the longitudinal joint sample location for in-place air voids (*C*).

31.2.4 Record the average density gauge reading in pcf (kg/m$^3$) at the interior mat random sample location for in-place air voids (*D*).

31.2.5 Record and report the data using the Example Longitudinal Joint Density Worksheet.

## 32. CALCULATIONS

32.1 Calculate the correlated joint density, CJD (%) of the compacted specimen:

$$CJD(\%) = \frac{A}{B} \times \frac{C}{D} \times 100$$

Where:

*A* = Average $G_a$ of cores at random sample location,

*B* = Rice gravity, $G_r$, for each sublot,

*C* = Average density gauge reading at the longitudinal joint, pcf (kg/m$^3$), and

*D* = Average density gauge reading at the interior mat sample location, pcf (kg/m$^3$).

# PART VIII—DETERMINING DENSITY OF PERMEABLE FRICTION COURSE (PFC) AND THIN BONDED WEARING COURSE (TBWC) MIXTURES

## 33. SCOPE

33.1 Use this procedure to back-calculate the $G_r$ of loose PFC and TBWC mixtures, to calculate the $G_a$ of laboratory-molded specimens for PFC and TBWC mixtures using dimensional analysis, and to calculate density of compacted PFC and TBWC mixtures.

## 34. APPARATUS

34.1 *Measuring Device,* such as a ruler, calipers, or measuring tape.

## 35. PROCEDURE

35.1 Back calculate $G_r$.

35.1.1 Obtain the $G_e$ of the combined aggregate blend.

**Note 37**—Obtain the $G_e$ from the Summary worksheet of the Mix Design Template.

35.1.2 Record and designate this as $G_e$ in Section 36.1.

35.1.3 Determine the AC of the PFC or TBWC mixture.

**Note 38**—Determine the AC of PFC-Asphalt Rubber (AR) mixtures by using the asphalt flow meter. Determine the AC of PFC PG 76 mixtures using an ignition oven in accordance with Tex-236-F or by using the asphalt flow meter

35.1.4 Record and designate this as $A_s$ in Section 36.1.

35.1.5 Determine the specific gravity of the asphalt binder. Round to three decimal places (0.001).

35.1.6 Record and designate this as $G_s$ in Section 36.1.

35.1.7 Calculate $G_r$ as noted in Section 36.1.

35.2 Calculate $G_a$ using dimensional analysis.

35.2.1 Measure the weight of the laboratory molded specimen in air, to the nearest 0.1 g.

35.2.2 Record and designate this weight as $W$ in Section 36.2.

35.2.3 Measure the height of the laboratory-molded specimen, to the nearest 0.1 mm.

35.2.4 Record and designate this height as $h$ in Section 36.2.

35.2.5 Measure the diameter of the laboratory-molded specimen, to the nearest 0.1 mm.

**Note 39**—The diameter for specimens molded with a Superpave Gyratory Compactor is 150 mm.

35.2.6 Calculate the radius of the laboratory-molded specimen by dividing the diameter, as determined in Section 34.2.5, by 2.

**Note 40**—The radius for specimens molded with a Superpave Gyratory Compactor is 75 mm.

35.2.7 Record and designate this as *r* in Section 36.2.

35.2.8 Calculate $G_a$ as noted in Section 36.2.

**Note 41**—Numerical value for π is 3.14.

35.3 Calculate density of compacted PFC or TBWC mixture.

35.3.1 Divide the $G_a$ determined in Section 35.2.8 by the $G_r$ determined in Section 35.1.7.

35.3.2 Multiply the results from Section 35.3.1 by 100.

**Note 42**—Round this calculated value to the tenth decimal place (0.1).

## 36. CALCULATIONS

36.1 Calculate the $G_r$ of the loose PFC or TBWC mixture:

$$G_r = \frac{100}{\left[\left(\frac{100 - A_s}{G_e}\right) + \left(\frac{A_s}{G_s}\right)\right]}$$

Where:

$G_r$ = theoretical maximum specific gravity,

$G_e$ = effective specific gravity, %,

$A_s$ = AC, %,and

$G_s$ = asphalt binder specific gravity, 0.001.

36.2 Calculate the $G_a$ of the compacted specimen:

$$G_a = \frac{\left[\frac{W}{\pi r^2 h}\right]}{\gamma}$$

Where:

$G_a$ = bulk specific gravity,

$W$ = weight of specimen, 0.1 g,

$\pi$ = pi, 3.14,

$r$ = radius of specimen, 1 mm,

$h$ = height of specimen, 0.1 mm, and

$\gamma$ = density of water, 0.001 g/mm$^3$.

## 37. REPORT FORMAT

37.1 Use the following Excel programs to calculate and report density test results.

37.1.1 Quality Control/Quality Assurance (QC/QA), used in conjunction with the hot mix specification and test data worksheets. Refer to the "Help" tab for detailed instructions on how to use the program.

37.1.2 Segregation Density Profile Form.

37.1.3 Longitudinal Joint Density Profile Form.

## 38. ARCHIVED VERSIONS

38.1 Archived versions are available.

# Tex-207-F (Part I)
# Determining Density of Compacted Bituminous Mixtures

**Calculation of the Bulk Specific Gravity & Absorption**

$$Ga = \frac{A}{B - C}$$

$$\% \text{ Density} = \frac{G_a}{G_r} \times 100$$

$$\% \text{ Absorption} = \frac{B - A}{B - C} \times 100$$

**Where:**

$G_a$ = Bulk specific gravity of compacted specimen
$G_r$ = Theoretical maximum specific gravity
A = Weight of dry specimen
B = Weight of the SSD specimen in air
C = Weight of the specimen in water

| | |
|---|---|
| $G_r$: | |

| | | |
|---|---|---|
| Specimen ID | | |
| Specimen | A | B |
| Height | | |
| (A) weight of dry specimen | | |
| (B) weight of the SSD specimen in air | | |
| (C) weight of the specimen in water | | |
| B – C | | |
| $G_a$ | | |
| Density | | |
| % Absorption | | |

| | |
|---|---|
| Average $G_a$ | |
| Average Density | |
| Average Air Voids | |

# Tex-207-F (Part I), Bulk Specific Gravity Worksheet

| | | |
|---|---|---|
| | **Gr:** | |
| Specimen ID | | |
| Specimen | **A** | **B** |
| Height | | |
| Air (A) | | |
| SSD (B) | | |
| Water (C) | | |
| B – C | | |
| $G_a$ | | |
| Density | | |
| % Absorption | | |
| | Average $G_a$ | |
| | Average Density | |
| | Average Air Voids | |

| | | |
|---|---|---|
| | Gr: | |
| Specimen ID | | |
| Specimen | A | B |
| Height | | |
| Air (A) | | |
| SSD (B) | | |
| Water (C) | | |
| B – C | | |
| $G_a$ | | |
| Density | | |
| % Absorption | | |
| | Average $G_a$ | |
| | Average Density | |
| | Average Air Voids | |

| | | |
|---|---|---|
| | **Gr:** | |
| Specimen ID | | |
| Specimen | **A** | **B** |
| Height | | |
| Air (A) | | |
| SSD (B) | | |
| Water (C) | | |
| B – C | | |
| $G_a$ | | |
| Density | | |
| % Absorption | | |
| | Average $G_a$ | |
| | Average Density | |
| | Average Air Voids | |

| | | |
|---|---|---|
| | Gr: | |
| Specimen ID | | |
| Specimen | A | B |
| Height | | |
| Air (A) | | |
| SSD (B) | | |
| Water (C) | | |
| B – C | | |
| $G_a$ | | |
| Density | | |
| % Absorption | | |
| | Average $G_a$ | |
| | Average Density | |
| | Average Air Voids | |

# Tex-207-F (Part VI), Vacuum Method
# Bulk Specific Gravity of Compacted Bituminous Mixtures

**Calculation of the Bulk Specific Gravity using the Vacuum Method**

$$Ga = \frac{A}{[(A + B) - C] - (B / CF)}$$

**Where:**

$G_a$ = Bulk specific gravity of compacted specimen
$G_r$ = Theoretical maximum specific gravity
A = Weight of specimen in air
B = Weight of the polymer bag in air
C = Weight of sealed specimen in water
CF = Correction factor

**Correction Factor Calculation (R = A/B)**

Small Bag CF = -0.000566 x R + 0.8121

Large Bag CF = -0.00166 x R + 0.8596

| | |
|---|---|
| $G_r$: | |

| | | |
|---|---|---|
| Specimen ID | | |
| Specimen | A | B |
| Height | | |
| (A) weight of specimen in air | | |
| (B) weight bag in air | | |
| (C) weight of sealed specimen in water | | |
| CF | | |
| $G_a$ | | |
| Density | | |

# Voids in Mineral Aggregate (VMA)

Voids in the mineral aggregate (VMA) is the space occupied by asphalt and air in a compacted asphalt specimen.

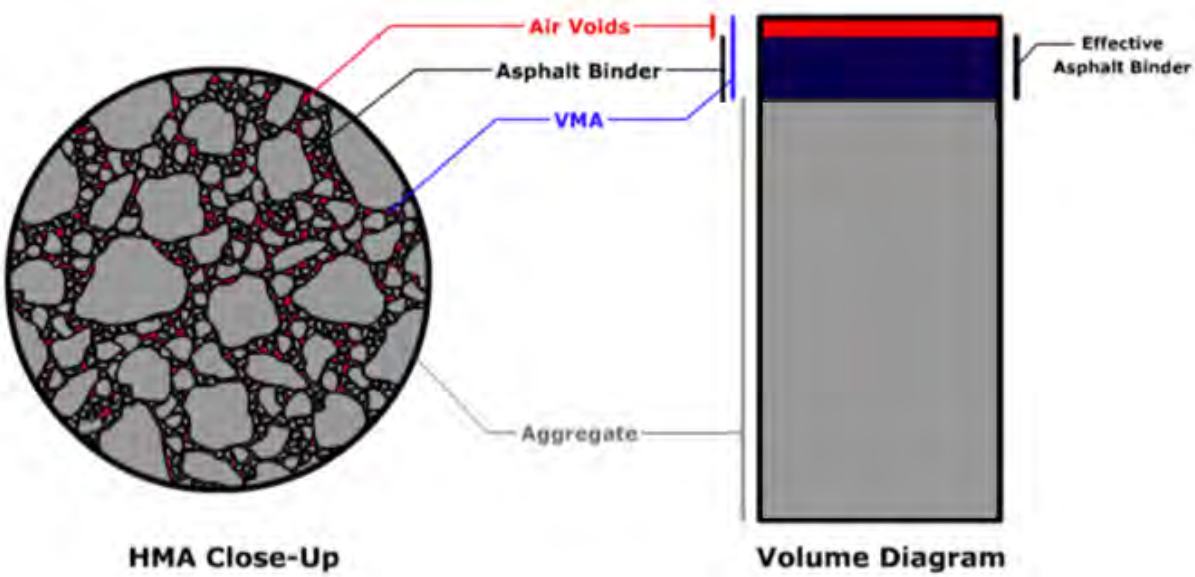


## Calculation

Design VMA = $[100 - (G_a / G_t) \times 100] + [(G_a \times A_S) / G_S]$

Production VMA = $[100 - (G_a / G_r) \times 100] + [(G_a \times A_S) / G_S]$

$G_s$ = Specific gravity of asphalt
$G_a$ = Bulk specific gravity of compacted specimens
$G_r$ = Theoretical maximum specific gravity
$G_t$ = Calculated theoretical maximum specific gravity
$A_S$ = Asphalt content, %

# Practice Problem

Design VMA = $[100 – (G_a / G_t) \times 100] + [(G_a \times A_S) / G_S]$

Production VMA = $[100 – (G_a / G_r) \times 100] + [(G_a \times A_S) / G_S]$

$G_s$ = 1.030
$G_a$ = 2.345
$G_r$ = 2.460
$G_t$ = 2.448
$A_s$ = 5.0

## Steps to Calculate Voids in Mineral Aggregates

| Design VMA | Production VMA |
|---|---|
| Step One: Calculate Density<br>$(G_a / G_t) \times 100$ | Step One: Calculate Density<br>$(G_a / G_r) \times 100$ |
| Step Two: Calculate Air Voids<br>100 – Step One | Step Two: Calculate Air Voids<br>100 – Step One |
| Step Three: Calculate Volume of Asphalt<br>$(G_a \times A_s) / G_s$ | Step Three: Calculate Volume of Asphalt<br>$(G_a \times A_s) / G_s$ |
| Step Four: Calculate VMA<br>Step Two + Step Three | Step Four: Calculate VMA<br>Step Two + Step Three |

**Test Procedure for**

# DETERMINING MOISTURE CONTENT OF BITUMINOUS MIXTURES

**TxDOT Designation: Tex-212-F**

***Effective Date: March 2016***

## 1. SCOPE

1.1 Use this test method to determine the moisture content of any type of bituminous paving mixtures by direct measurement and to determine the moisture in aggregates for bituminous mixtures and in completed bituminous mixtures that have no significant amounts of hydrocarbon volatiles.

1.1.1 Use Part I to determine the moisture content of any type of bituminous paving mixtures by direct measurement.

1.1.2 Use Part II to determine the moisture (free and/or absorbed) in aggregates for bituminous mixtures, and in completed bituminous mixtures that have no significant amounts of hydrocarbon volatiles.

1.2 The values given in parentheses (if provided) are not standard and may not be exact mathematical conversions. Use each system of units separately. Combining values from the two systems may result in nonconformance with the standard.

# PART I—MOISTURE CONTENT BY DISTILLATION

## 2. SCOPE

2.1 Use this procedure to determine the moisture content of any type of bituminous paving mixtures by direct measurement.

## 3. APPARATUS

3.1 *Metal still,* consisting of a vertical cylindrical container, approximately 5 in. (127 mm) in diameter and 6 in. (152 mm) deep, with removable lid, heavy fiber gasket or O-ring, and a clamping system. There should be two holes in the lid, each approximately 1 in. (25 mm) in diameter, to provide for entrance of the water trap-condenser assembly and a safety valve.

3.2 *Moisture trap,* of 0.85 fl. oz. (25 mL) capacity, graduated in 0.0034-fl. oz. (0.1-mL) divisions and equipped with cork stoppers.

3.3 *Condenser*, Liebig glass-tube type, with a condenser jacket approximately 16 in. (400 mm) long.

3.4 *System of tubing,* for passing water continuously through condenser.

3.5 *Loose, clean cotton,* for plugging the top of the condenser.

3.6 *Balance,* Class G2 in accordance with Tex-901-K.

3.7 *Hot plate* or other satisfactory heating device.

3.8 *Ring stand,* with base and clamp.

3.9 *Pipette,* with 0.03–0.35 fl. oz. (1–10 mL) capacity.

3.10 *Bucket*, 1 gal. (4 L), with airtight lid or plastic bag.

## 4. MATERIALS

4.1 *Water-free gasoline.*

## 5. PROCEDURE

5.1 Obtain a representative sample of the bituminous mixture in accordance with Tex-222-F. Thoroughly mix, breaking up large lumps.

5.2 Reduce the mixture to laboratory test size by quartering, or by thoroughly blending the material and taking small portions from several places in the pan.

**Note 1**—Keep samples in moisture-tight containers from the time of sampling to the time of testing.

5.3 Weigh a 500–600 g sample and record to the nearest 0.1 g as $X$ under Section 6.

5.4 Immediately pour the weighed sample into the still.

5.5 Add gasoline until the sample is covered to a depth of about 1 in. (25 mm).

5.6 Place gasket or O-ring on rim of still and firmly fasten the lid with the clamping system.

5.7 Insert the moisture trap through a rubber stopper in the still lid, making sure the tip extends away from the source of heat, and assemble the condenser.

5.8 Place a cork or rubber stopper in the other hole as a safety valve. Minimize evaporation loss by inserting a loose cotton plug in the top of the glass condenser. Inspect all stoppers regularly to be certain they do not leak.

5.9 Circulate plenty of cool water continuously through the condenser. Apply heat at such rate that refluxing will start within 5–10 minutes after the heat has been applied and solvent will drip from the condenser at a rate of 85–95 drops per minute. Check the

temperature of the water passing from the condenser and control the flow so that its temperature does not exceed 110°F (43°C).

5.10 Continue distillation until three consecutive readings of the trap at 15 minute intervals show no increase in the condensed water.

5.11 If the volume of moisture exceeds the capacity of the trap, stop the distillation, allow the still and trap to cool, record meniscus reading and withdraw 0.35–0.7 fl. oz. (10–20 mL) of water from the bottom of the trap with pipette. Record the volume of water removed.

5.12 Cool the moisture trap and contents to room temperature.

5.13 Rinse the condenser tube with gasoline to remove any trace of moisture and read the meniscus between the gasoline and water.

5.14 The meniscus value, in addition to any water withdrawn from the trap, is the volume of moisture removed from the bituminous mixture.

5.15 Record the total volume of moisture as $V$ (under Section 6), which is also the weight of the moisture, since the assumption is made that one milliliter of water weighs one gram at room temperature.

## 6. CALCULATIONS

6.1 Calculate percent by weight of moisture in the mixture:

$$Percent\ Moisture = \frac{100V}{X}$$

Where:
$X$ = Weight of total sample, g
$V$ = Volume of moisture, mL.

6.2 Report moisture content test results to the nearest 0.1%.

## 7. PRECAUTIONS

7.1 To maintain a safe working condition:

7.1.1 Use care in handling and heating the solvent, and avoid inhaling fumes.

7.1.2 Fumes should not escape the still. Escaping fumes indicate a possible fire hazard.

7.1.3 Verify that all connections and the lid on the still are fastened tightly.

# PART II—MOISTURE CONTENT BY OVEN DRYING

## 8. SCOPE

8.1 Use this procedure to determine the moisture in aggregates for bituminous mixtures and in completed bituminous mixtures that have no significant amounts of hydrocarbon volatiles.

## 9. APPARATUS

9.1 *Balance,* Class G2 in accordance with Tex-901-K.

9.2 *Drying oven*, capable of attaining a temperature of 200°F (93°C), or suitable microwave oven.

9.3 *Pans*, suitable for drying aggregates.

## 10. PROCEDURE

10.1 Obtain a representative sample of the bituminous mixture in accordance with Tex-222-F.

10.2 Thoroughly mix, breaking up large lumps, and reduce to laboratory test size by quartering the material, or by thoroughly blending the material and taking small portions from several places from the entire area of the pan.

**Note 2**—Keep samples in moisture-tight containers from the time of sampling to the time of testing.

10.3 Weigh a pan and record this weight to the nearest 0.1 g as A under Section 11.

10.4 Quickly place approximately 2000 g of mix in the pan and weigh to the nearest 0.1 g. Record the combined weight of the pan and sample as B under Section 11.

10.5 Immediately place material in pre-heated oven and allow sample to dry at 200–300°F (93–150°C). Stir sample periodically to facilitate drying.

10.6 Remove pan of material at 30-minute intervals and weigh to the nearest 0.1 g. Record the combined weight of the pan and sample.

10.7 Place pan back in oven immediately and continue drying.

10.8 Continue the drying and weighing procedure until a constant weight is reached. Record final weight of the pan and sample as C under Section 11.

**Note 3**—Constant weight is defined as the weight at which further drying does not alter the weight by more than 0.05% in a 2-hour or longer drying interval in accordance with Section 11.

## 11. CALCULATIONS

11.1 Calculate the percent by weight of moisture in the sample:

11.1.1 For Aggregates:

$$Moisture\ Content = \frac{B - C}{C - A} x 100$$

11.1.2 For Bituminous Mixtures:

$$Moisture\ Content = \frac{B - C}{B - A} x\ 100$$

Where:
$A$ = Tare weight of pan
$B$ = Original sample weight plus pan
$C$ = Final sample weight plus pan.
**Note 4**—Other methods of moisture determination that correlate satisfactorily with Part I or Part II may be used.

11.2 Calculate the percent difference in weight:

$$Percent\ Difference = \frac{Initial\ Weight\ -\ Final\ Weight}{Initial\ Weight} \times 100$$

11.3 Report moisture content test results to the nearest 0.1%.

## 12. ARCHIVED VERSIONS

12.1 Archived versions are available.

# Tex-212-F (Part 2), Moisture Content of Bituminous Mixtures

## Calculation

For Aggregates:

Moisture Content = [(B-C) / (C-A)] x 100

For Bituminous Mixtures:

Moisture Content = [(B-C) / (B-A)] x 100

## Where

A = Tare weight of pan
B = Original sample weight plus pan
C = Final sample weight plus pan

## Test Procedure for

# SAMPLING AGGREGATE FOR BITUMINOUS MIXTURES, SURFACE TREATMENTS, AND LIMESTONE ROCK ASPHALT

## TxDOT Designation: Tex-221-F

***Effective Date: January 2018***

## 1. SCOPE

1.1 Use this test method to sample:

- limestone rock asphalt aggregate before the addition of flux oil and water and
- aggregates used for bituminous mixtures and surface treatments (pre-coated) before the addition of asphaltic materials or water.

1.2 The values given in parentheses (if provided) are not standard and may not be exact mathematical conversions. Use each system of units separately. Combining values from the two systems may result in nonconformance with the standard.

## 2. SECURING SAMPLES

2.1 A Department representative will select samples that are characteristic of the true nature and condition of the materials.

2.2 Samples, which require a mechanical analysis in accordance with Tex-200-E, must conform to the weight requirements shown in Table 1.

## 3. SAMPLING PROCEDURES

3.1 *Sampling from the Plant:*

3.1.1 Make a general inspection of the plant and a record of the screening facilities.

3.1.2 Before sampling, permit the plant to produce a minimum of 4.5 Mg (5 tons) of mixture.

3.1.2.1 For a weight-batching type plant, take samples from the aggregate bins that feed into the weigh-box.

3.1.2.2 For a continuous mix-type plant, take samples from the aggregate bins that feed the proportioning mechanism.

3.1.2.3 For a drum type plant, take samples from the collector belt feeding the aggregate into the drum. When an aggregate flow diversion chute is not available, stop the feed belt before obtaining the sample.

3.1.3 Take samples from the entire cross-section of the flow of material from each individual bin as it is being discharged.

3.2 *Sampling Before Plant Processing:*

3.2.1 *Sampling from Bins or Belt:*

3.2.1.1 For preliminary investigation work, sample aggregates in their natural condition before plant processing.

3.2.1.2 If the materials are being fed to the plant from bins, obtain the sample from the collector belt after materials have passed the scalping screen.

3.2.1.3 The preferred method of sampling from the belt is a mechanical belt-sampling device approved by the Engineer. This method does not require the belt to be stopped, but simply diverts the flow of aggregate for a designated period where the sample is collected.

3.2.1.4 When mechanical devices are not used, stop the belt before sampling, and take the sample from the entire width of the belt and at least 3 ft. (1 m) of the length, using a square-nosed scoop.

3.2.1.5 After removing the aggregate, brush all fines from the exposed section of the belt using a stiff bristled brush, and add to the sample.

3.2.2 *Sampling from Stockpiles that Contain Coarse and Fine Aggregate:*

3.2.2.1 Identify locations around the perimeter of the stockpile that represent the approximate quarter points of the stockpile. Clean and level the ground at these locations to prevent contamination of the sampling pile.

3.2.2.2 Sample each quarter point of the stockpile.

3.2.2.2.1 Using a front-end loader large enough to cut into the stockpile from bottom to top in one continuous cut, make enough cuts into the stockpile at one of the quarter points so that the cut at ground level is perpendicular to the top edge of the stockpile at the quarter point. If available, the blade of the loader bucket must be straight, flat, and without teeth. Only use a loader with a toothed bucket when a loader with a bucket that is straight, flat, and without teeth is not available. Make the cuts from the bottom to the top to expose a clean, interior vertical face representing the full height of the stockpile. Clean out the cut as needed to leave a minimal amount of material on the ground before obtaining the sample.

3.2.2.2.2 Discard the material obtained from the cuts.

3.2.2.2.3 Using the front-end loader, cut into the exposed interior face to a depth equal to approximately half the depth of the loader bucket, taking care not to overload the bucket in the bottom half of the stockpile. Make the cut from the bottom to the top in one continuous motion.

3.2.2.2.4 Lower the bucket until it is as close as possible to the surface of the ground, and empty the entire contents of the bucket onto the ground in one motion without having to raise the bucket before all contents are emptied. Repeat this process 3 more times, each time emptying the loader bucket next to the last load, as shown in Figure 1.

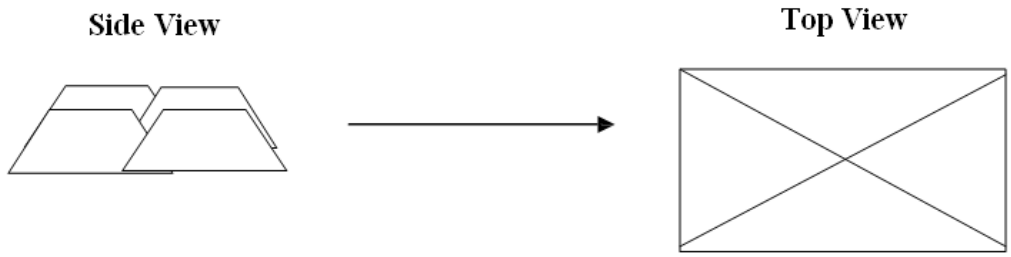


**Figure 1**—Placement and Sampling of Piles

3.2.2.2.5 Using the loader bucket, strike and level the sample piles at mid-height in the direction the bucket was emptied.

3.2.2.2.6 Using a shovel, identify the approximate midpoint of each bucket load, and dig straight down to remove material for sampling. Deposit the material removed from the hole into sample containers (preferably 5-gal. buckets). Minimize loose material falling from the sides of the hole and loss of material from the shovel into the hole or adjacent ground while filling sample containers. Remove enough material from each hole to fill one sample container. This method will yield 4 containers of sampled material for each quarter point of the stockpile sampled.

3.2.2.2.7 Seal and label the sample containers. Include the quarter point location on the label.

3.2.2.3 Repeat Sections 3.2.2.2.1–3.2.2.2.7 at each of the stockpile quarter points.

3.2.2.4 A Department representative will divide the total sample into 3 equal portions and offer one portion of the sample to the producer, retain one portion for district testing, and retain one portion for CST/M&P for referee and random blind sample testing.

3.2.3 *Sampling from Stockpiles that Contain Only Coarse or Only Fine Aggregate:*

3.2.3.1 Obtain a representative sample from a stockpile. When conditions require sampling from this source, take separate samples from different parts of the pile. Avoid any segregated areas.

3.2.3.2 Take samples from stockpiles near the top of the pile, near the base of the pile and at an intermediate point.

3.2.3.3 Shove a board into the pile just above the point of sampling to prevent further segregation during sampling.

3.2.3.4 Do not use the aggregate on the surface of the stockpile as a part of the sample.

3.2.3.5 In each instance, dig a small trench or hole into the pile approximately 1 ft. deep and take the sample from the innermost part of the hole.

3.2.3.6 Take samples from these 3 points at several places around the stockpile and combine them to form a composite sample.

3.2.4 *Sampling from Railroad Cars and Trucks:*

**Note 1**—Provide a proper sampling stand and take adequate safety precautions to prevent bodily injury. Avoid walking or standing on the aggregate while sampling.

3.2.4.1 View the material after loading is complete. Note areas of obvious segregation, and avoid sampling from these locations.

3.2.4.2 Select a minimum of 3 representative sections in the truck bed or railcar. Dig a minimum of 12 in. (300 mm) below the surface, and remove at least 10 lb. (4.5 kg) of material from each of the sections.

3.2.4.3 Combine all of the samples and mix thoroughly.

3.2.4.4 Reduce the sample by quartering (as directed in Tex-200-F) to the required size in accordance with Table 1.

**Table 1—Minimum Size of Samples**

| Nominal Max Size of Particles, Passing Sieve[1] | Minimum Weight of Field Sample, g (lb.)[2] | Minimum Weight of Sample for Test, g (lb.)[3] |
|---|---|---|
| **Fine Aggregate** | | |
| No. 8 (2.36 mm) | 4500 (10) | 500 (1.1) |
| No. 4 (4.75 mm) | 4500 (10) | 500 (1.1) |
| **Coarse Aggregate** | | |
| 3/8 in. (9.75 mm) | 4500 (10) | 1000 (2) |
| 1/2 in. (12.5 mm) | 4500 (10) | 1500 (3) |
| 3/4 in. (19.0 mm) | 4500 (10) | 2000 (4) |
| 1 in. (25.0 mm) | 6800 (15) | 3000 (6) |
| 1-1/2 in. (37.5 mm) | 9000 (20) | 4000 (8) |

1. Nominal maximum size is one sieve size larger than the first sieve that retains more than 10% of the aggregate.
2. When sampling hot bins, samples need to be larger than is necessary to provide the test sample weight when combining two opposite quarters; therefore, the weight of the composite hot bin sample must equal twice the minimum weight of sample for tests.
3. Obtain the test sample from the field sample by quartering, or other suitable means, to ensure a representative portion (as described in Tex-200-F).

## 4. SAMPLE IDENTIFICATION

4.1 Adequate identification on Form 202, "Identification of Material Samples," should accompany each individual sample.

## 5. ARCHIVED VERSIONS

5.1 Archived versions are available.

## Test Procedure for

# SAMPLING BITUMINOUS MIXTURES

## TxDOT Designation: Tex-222-F

***Effective Date: January 2016***

## 1. SCOPE

1.1 Use this test method to sample mixtures of bituminous materials. Several sampling procedures are described.

1.2 The values given in parentheses (if provided) are not standard and may not be exact mathematical conversions. Use each system of units separately. Combining values from the two systems may result in nonconformance with the standard.

## 2. SELECTING SAMPLES

2.1 Use every precaution to obtain representative samples of the bituminous mixtures, to avoid segregation, and to prevent contamination by foreign matter.

2.2 Attach Form 202, "Identification of Material Samples," to each sample container.

## 3. SAMPLE SIZE

3.1 When sampling any type of bituminous mixture for future laboratory testing, the minimum sample size will fill a 1-gal. (4-L), clean, friction-top bucket.

3.2 If extensive testing is desired, sample 2 or more buckets of the material, as required. Blend all sampled materials to form a composite sample prior to quartering to size for laboratory tests.

## 4. SAMPLING PROCEDURES

4.1 *Sampling Plant-Mixed Bituminous Mixtures:*

**Note 1**—Provide a proper sampling stand and take adequate safety precautions to prevent bodily injury.

4.1.1 *Method A*—Follow these steps to obtain samples from trucks or railroad cars.

4.1.1.1 Obtain multiple representative samples from the truck bed or railroad car.

4.1.1.1.1 View the mix after loading is complete. Note areas of obvious segregation and avoid taking samples from these locations.

4.1.1.1.2 Take all necessary safety precautions when obtaining these samples. Avoid walking or standing on the hot mix while taking these samples.

4.1.1.2 Select a minimum of 3 sections in the truck bed or railcar. Dig a minimum of 12 in. (300 mm) below the surface and remove at least 10 lb. (4.5 kg) of material from each of the sections.

4.1.1.3 Combine and thoroughly mix together all of the samples.

4.1.1.4 Split the combined sample into individual samples in accordance with Tex-200-F.

4.1.1.5 Any individual samples allowed to cool to ambient temperatures and to be transported to another laboratory for testing must not exceed a thickness greater than 3 in.

**Note 2**— Recommended sampling containers are paper bags or cardboard boxes.

4.1.2 *Method B*—Follow these steps to obtain a plant-mixed sample.

4.1.2.1 Fill the bucket of a front-end loader with mix directly from the discharge chute.

**Note 3**—Clean the bucket of all materials that may contaminate the sample.

4.1.2.2 Take samples from several locations in the bucket to form a composite minimum sample of 30 lb. (13.5 kg).

4.1.2.3 Split the combined sample into individual samples in accordance with Tex-200-F.

4.1.2.4 Any individual samples allowed to cool to ambient temperatures and to be transported to another laboratory for testing must not exceed a thickness greater than 3 in.

**Note 4**— Recommended sampling containers are paper bags or cardboard boxes.

4.2 *Obtaining Bituminous Mixtures from Stockpiles at the Plant:*

4.2.1 Obtain equal quantities of the mixture from holes dug into points near the top, middle, and bottom of the stockpile.

4.2.1.1 Combine and thoroughly mix together all of the samples.

4.2.1.2 Split the combined sample into individual samples in accordance with Tex-200-F.

4.3 *Sampling Bituminous Mixtures from Windrows:*

4.3.1 Take a representative sample of the windrow at intervals of not more than 500 ft. (152 m).

4.3.1.1 Whenever practical, secure samples from a complete cross-section of material approximately 1 ft. (100 mm) wide.

4.3.1.2 When the full depth of the cross-section is sampled, take care to exclude any foreign matter.

4.3.2 Combine and thoroughly mix together all of the samples.

4.3.3 Split the combined sample into individual samples in accordance with Tex-200-F.

4.3.4 Any individual samples allowed to cool to ambient temperatures and to be transported to another laboratory for testing must not exceed a thickness greater than 3 in.

**Note 5**—Recommended sampling containers are paper bags or cardboard boxes.

4.4 *Sampling Bituminous Mixture Cores from the Roadway:*

4.4.1 Sample in a cool part of the day to facilitate removal of the pavement specimen with minimum possibility of damage.

**Note 6**—Use ice, dry ice, or carbon dioxide to cool the pavement area to be sampled, when taking samples in full heat.

4.4.2 Take core samples of the diameter required by the specifications.

4.4.3 Remove a minimum of 2 samples at each location unless otherwise stated in the specification.

4.4.4 Wipe the sample surface dry with a cloth, individually wrap in paper or rags, and pack tightly in 1-gal. (4-L) buckets, if shipping to a central laboratory for testing. Sufficiently identify each individual core.

4.4.5 Remove large pavement samples for testing, if required.

4.4.6 Use the sharp, narrow cutting blade of a mattock (or other means) to pry loose a sample approximately 457 mm (18 in.) square from the roadway pavement. To prevent cracking, take extra care in removing and transporting the sample.

4.4.7 Place the sample between two clean pieces of 19-mm (0.75-in.) thick plywood, with the smoothest, cleanest surface of the sample down, and tie securely with heavy cord. Transport the sample with the smooth side remaining down.

4.4.8 To prevent evaporation of the moisture of a pavement sample, and/or the hydrocarbon volatiles of cold-laid mixtures, wrap the sample in aluminum foil.

4.5 *Sampling Loose Material Behind the Laydown Machine:*

4.5.1 Sample after approximately half of the truck load has passed through the laydown machine, either from various points in front of the screed on the machine or from various points immediately behind.

4.5.2 Any individual samples allowed to cool to ambient temperatures and to be transported to another laboratory for testing must not exceed a thickness greater than 3 in.

**Note 7**—Recommended sampling containers are paper bags or cardboard boxes.

4.6 *Sampling Asphalt Patching Mix:*

4.6.1 Approximately 40 lb. (18 kg) of sample is required for specification tests on this material.

4.6.2 Submit one sample for each 50 tons (45 Mg) or fraction thereof. (See Table 1.)

**Table 1—Sampling Asphalt Patching Mix**

| If the material is. . . | then. . . |
|---|---|
| Purchased in 50-lb. (23-kg) pails | Select, at random, one or more pails as necessary and submit as the sample. |
| Supplied in 55-gal. (200-L) drums | ▪ Select a drum at random, open, scrape aside or remove approximately 2 in. (51 mm) of material, dig out a 14-kg (30-lb.) sample, and place in a pail.<br>▪ Immediately seal the pail and the 55-gal. (200-L) drum to prevent loss of volatiles. |
| Purchased in (40–60-lb.) sealed bags | Select, at random, one or more bags as necessary and submit as the sample. |
| Supplied as a stockpile | Follow the procedure from Section 4.2. |

## 5. ARCHIVED VERSIONS

5.1 Archived versions are available.

**Test Procedure for**

# RANDOM SELECTION OF BITUMINOUS MIXTURE SAMPLES

**TxDOT Designation: Tex-225-F**

***Effective Date: August 2016***

## 1. SCOPE

1.1 Use this test method to randomly select points from which to sample loose bituminous mixtures at the plant and to determine roadway locations for obtaining hot-mix asphalt cores.

1.1.1 Use Part I to select sampling points of hot-mix asphalt mixtures and other materials randomly.

1.1.2 Use Part II to select pavement locations for the coring of hot-mix asphalt pavements.

1.2 Use the automated Random Number worksheet to generate and report all results.

1.3 The values given in parentheses (if provided) are not standard and may not be exact mathematical conversions. Use each system of units separately. Combining values from the two systems may result in nonconformance with the standard.

# PART I—RANDOM SELECTION OF PRODUCTION SAMPLES

## 2. SCOPE

2.1 Use this method to randomly select sampling points of hot-mix asphalt mixtures during plant production.

## 3. PROCEDURE

3.1 Select the lot and sublot size as defined in the specification.

3.2 Use the Random Number worksheet to determine the random numbers for production sampling for the entire project.

**Note 1**—Random numbers must be a decimal unit between 0.001 through 0.999. The random number is A in Table 1.

3.3 Multiply the total mass of the sublot as determined in Section 3.1 by the random number (A) determined in Section 3.2.

3.4 Add the result from Section 3.3 to the mass at the beginning of the sublot to obtain the mass for the sampling location.

**Note 2**—This is the Production Location, as shown in Table 1.

## 4. PRODUCTION SAMPLES EXAMPLE

4.1 Lot size = 2,000 tons (1814 Mg)

4.2 Sublot size = 500 tons (454 Mg)

**Table 1—Production Samples Example**

| Sample | Sublot Mass | Random Number (A) | Sublot Location | Production Location |
|---|---|---|---|---|
| 1 | 500 tons (454 Mg) | .515 | 258 tons (234 Mg) | 258 tons (234 Mg) |
| 2 | 500 tons (454 Mg) | .969 | 485 tons (440 Mg) | 985 tons (894 Mg) |
| 3 | 500 tons (454 Mg) | .532 | 266 tons (241 Mg) | 1,266 tons (1149 Mg) |
| 4 | 500 tons (454 Mg) | .709 | 355 tons (322 Mg) | 1,855 tons (1684 Mg) |

# PART II—RANDOM SELECTION OF PAVEMENT LOCATIONS

## 5. SCOPE

5.1 Use this method to randomly select pavement locations for the coring of hot-mix asphalt pavements.

## 6. PROCEDURE

6.1 Determine the length and width of the sublot, after the sublot is completed.

6.2 Use the Random Number worksheet to determine the random numbers for the sublot length and width offset for the entire project.

**Note 3**—Random numbers must be a decimal unit between 0.001 through 0.999. The random numbers are A and B in Table 2.

6.3 Multiply the total length of the sublot by the sublot length random number (A) determined in Section 6.2, as shown in Table 2.

6.4 Add the result from Section 6.3 to the station number at the beginning of the sublot to obtain the station of the coring location.

**Note 4**—Make appropriate adjustments if the stationing is not continuous.

6.5 Multiply the width of the sublot by the sublot width offset random number (B) determined in Section 6.2, as shown in Table 2.

6.6 Measure the width offset from the right side of the sublot completed facing in the direction of paving.

**Note 5**—Adjust the sublot width location by no more than necessary, if the sublot width offset is within 2 ft. of a longitudinal joint or pavement edge.

6.7 Repeat Sections 6.3 through 6.6 to determine a new core location.

## 7. PAVEMENT CORE LOCATION EXAMPLE

7.1 Beginning Station = 0 + 00 ft. (0 + 000.000 m)

7.2 Lot size = 6,562 ft. (2000 m)

7.3 Sublot size = 1,640 ft. (500 m)

**Table 2—Pavement Coring Location Example**

| Sample | Sublot Length | Random Number (A) | Sublot Location | Station Number | Sublot Width | Random Number (B) | Width Offset |
|---|---|---|---|---|---|---|---|
| 1 | 1,640 ft. (500 m) | .035 | 57.4 ft. (17.5 m) | 0 + 57.4 ft. (0 + 17.5 m) | 12 ft (3.66 m) | .175 | 2.1 ft. (0.64 m) |
| 2 | 1,640 ft. (500 m) | .392 | 642.9 ft. (196 m) | 22 + 82.9 ft. (6+ 96.0 m) | 12 ft (3.66 m) | .694 | 8.3 ft. (2.53 m) |
| 3 | 1,640 ft. (500 m) | .970 | 1,590.8 ft. (485 m) | 48 + 70.8 ft. (14 + 85.0 m) | 12 ft (3.66 m) | .692 | 8.3 ft. (2.53 m) |
| 4 | 1,640 ft. (500 m) | .932 | 1,528.5 ft. (466 m) | 64 + 48.5 ft. 19 + 66.0 m) | 12 ft (3.66 m) | .206 | 2.5 ft. (0.75 m) |

## 8. ARCHIVED VERSIONS

8.1 Archived versions are available.

# Tex-225-F, Random Selection of Pavement Locations

| Sublot | Sublot Size | Random Number | Sublot Location | Production Location |
|---|---|---|---|---|
| 1 | | | | |
| 2 | | | | |
| 3 | | | | |
| 4 | | | | |

**Test Procedure for**

# INDIRECT TENSILE STRENGTH TEST

**TxDOT Designation: Tex-226-F**

***Effective Date: July 2019***

## 1. SCOPE

1.1 This test method determines the tensile strength of compacted bituminous mixtures.

1.2 The values given in parentheses (if provided) are not standard and may not be exact mathematical conversions. Use each system of units separately. Combining values from the two systems may result in nonconformance with the standard.

## 2. APPARATUS

2.1 *Apparatus used in Tex-241-F.*

2.2 *Apparatus used in Tex-207-F.*

2.3 *Apparatus used in Tex-227-F.*

2.4 *Temperature Chamber or Heating Oven,* capable of maintaining 77 ± 2°F (25 ± 1°C).

2.5 *Loading Press,* capable of applying a compressive load at a controlled deformation rate of 2 in. per min.

2.6 *Loading Strips,* consisting of 0.75 × 0.75 in. square steel bars. Machine the surface in contact with the specimen to the curvature of the test specimen.

## 3. SPECIMENS

3.1 *Laboratory-Molded Specimens*—Prepare four specimens in accordance with Tex-241-F. Specimen diameter must be 5.9 in. and height must be 2.4 ± 0.1 in.

3.1.1 Density of test specimens must be 93 ± 1%, except for Crack Attenuating Mix (CAM).

**Note 1**—Mixture weights for laboratory-molded specimens that achieve the density requirement typically vary between 2,400 and 2,600 g.

3.1.2 For CAM mixtures, mold test specimens to 95 ± 1% density.

**Note 2**—Mixture weights for laboratory-molded specimens that achieve the density requirement typically vary between 2,400 and 2,600 g.

3.2 *Core Specimens*—Specimen diameter must be 6 in. and height must be a minimum of 1.5 in. There is not a specific density requirement for core specimens.

## 4. PROCEDURE

4.1 *Laboratory-Molded Mixtures:*

4.1.1 Mold four specimens in accordance with Section 3.1.

4.1.2 Calculate the density of the specimens in accordance with Tex-207-F and Tex-227-F.

4.1.3 Allow the specimens to stand at room temperature (77 ± 3˚F) for a minimum of 24 hr. before testing.

4.1.4 Test laboratory-molded specimens within three days of molding.

4.2 *Roadway Cores:*

4.2.1 Obtain roadway cores meeting the requirements of Section 3.2.

4.2.2 Trim the bottom or top of the core only when necessary to remove any foreign matter and to provide a level and smooth surface for testing.

4.3 Record the density, height, and diameter of each molded specimen or roadway core.

4.4 Place the specimens or cores in the temperature chamber or oven long enough to ensure a consistent temperature of 77 ± 2°F (25 ± 1°C) throughout the specimen before testing. Do not leave the specimens or cores in the temperature chamber or oven for more than 24 hr.

4.5 Calibrate the loading press to use a deformation rate of 2 in. per min.

4.6 Carefully place one specimen on the lower loading strip.

4.7 Slowly lower top loading strip into light contact with the specimen.

4.8 Ensure the two loading strips remain parallel to each other during testing.

4.9 Apply the load at a controlled deformation rate of 2 in. per minute and record the total vertical load at failure of the specimen.

4.10 Repeat Sections 4.6–4.9 for each specimen.

## 5. CALCULATIONS

5.1 Calculate the tensile strength of the compacted bituminous mixture:

$$S_T = \frac{2F}{3.14x(hd)}$$

Where:

$S_T$ = Indirect tensile strength, psi

$F$ = Total applied vertical load at failure, lb.

$h$ = Height of specimen, in.

*d* = Diameter of specimen, in.

## 6. REPORT

6.1 Report the following for each specimen:

- density,
- height,
- diameter,
- total load at failure, and
- indirect tensile strength.

6.2 Report the average indirect tensile strength of the tested specimens or cores to the nearest whole number.

## 7. TEST RECORD FORMS

7.1 Indirect Tensile Strength Test

## 8. ARCHIVED VERSIONS

8.1 Archived versions are available.

# Tex-226-F, Indirect Tensile Strength Test

**Calculation**

$$S_T = \frac{2F}{3.14 \times (hd)}$$

**Where:**

$S_T$ = Indirect Tensile Strength
F = Total applied vertical load at failure
h = Height of specimen
d = Diameter of specimen

**Test Procedure for**

# THEORETICAL MAXIMUM SPECIFIC GRAVITY OF BITUMINOUS MIXTURES

**TxDOT Designation: Tex-227-F**

***Effective Date: July 2019***

## 1. SCOPE

1.1 Use this test method to determine the theoretical maximum specific gravity (commonly referred to as "Rice gravity") of a bituminous mixture. The theoretical maximum specific gravity of a bituminous mixture is the bulk specific gravity of that mixture when compacted to the point of zero air voids. Use the specific gravity obtained to calculate the percent air voids and percent voids in mineral aggregates (VMA) contained in compacted samples as described in Tex-207-F. The theoretical maximum specific gravity is also used to calculate the effective specific gravity ($G_e$) of aggregates as described in Tex-204-F.

1.1.1 Part I is no longer an approved method. Refer to Part II of the test procedure.

1.1.2 Use Part II to perform the test using the 4,500 mL metal vacuum pycnometer and vibrating table.

1.1.3 Part III is no longer an approved method. Refer to Part II of the test procedure.

1.2 Refer to Table 1 for Superpave and conventional mix nomenclature equivalents. Replace conventional nomenclature with Superpave nomenclature when required.

**Table 1**
**Nomenclatures and Definitions**

| Nomenclatures | | Definitions |
|---|---|---|
| **Conventional** | **Superpave** | |
| $G_e$ | $G_{se}$ | Effective Specific Gravity of Aggregates |
| $G_r$ | $G_{mm}$ | Theoretical maximum specific gravity |
| $G_{rc}$ | $G_{mm}$ | Theoretical maximum specific gravity corrected for water absorption during test |

1.3 Use Table 2 to achieve sample size requirements.

**Table 2**
**Sample Size**

| Nominal Maximum Size of Aggregate in Mixture, in. (mm)[1] | Minimum Weight of Sample, g (lb.) |
|---|---|
| 1 (25.0) | 2,500 (5.5) |
| 3/4 (19.0) | 2,000 (4.4) |
| 1/2 (12.5) | 1,500 (3.3) |
| 3/8 (9.5) | 1,000 (2.2) |
| #4 (4.75) | 500 (1.1) |

1. Nominal maximum aggregate size is one sieve size larger than the first sieve that retains more than 10% of the total aggregate.

1.4 The values given in parentheses (if provided) are not standard and may not be exact mathematical conversions. Use each system of units separately. Combining values from the two systems may result in nonconformance with the standard.

# PART I—USING HAND-HELD GLASS PYCNOMETER

## 2. SCOPE

2.1 The hand-held glass pycnometer is no longer an accepted process.

2.2 Refer to Part II of this test procedure.

# PART II—USING A METAL VIBRATORY PYCNOMETER

## 3. SCOPE

3.1 This procedure measures the theoretical maximum specific gravity of bituminous mixtures using a metal vibratory pycnometer.

## 4. APPARATUS

4.1 *Metal vacuum pycnometer*, 150 fl. oz. (4,500 mL), with a clear poly (methyl methacrylate) (PMMA) lid for applying vacuum (Humbolt H-1750, Gilson SG-16A, or equal).

4.2 *Vibrating table*, Humbolt H-1755, Gilson SGA-5RT, or equal.

4.3 *Vacuum hoses, connections, tapered stoppers, and valves*, suitable to apply and control the specified vacuum level within the assembly. A vacuum flask or moisture trap needs to be inline between the vacuum pump and the metal vacuum pycnometer to prevent water vapor from entering the vacuum pump.

4.4 *Manometer or vacuum gauge*, able to determine the level of pressure (vacuum) within the assembly.

4.4.1 Do not keep a manometer in the system during routine testing, as a sudden vacuum loss can break it.

4.4.2 Use the manometer to qualify vacuum pumps and water aspirators and check the accuracy of vacuum gauges.

4.5 *Vacuum pump or water aspirator*, to evacuate air from the assembly.

4.5.1 It must be able to reduce residual pressure to 2.0 in. (50 mm) Hg or less before completion of the evacuation process of the procedure. (See Section 10.)

4.5.2 A quick check to determine the adequacy of a vacuum source is possible without the use of a manometer, should the vacuum gauge reading be suspect.

4.5.2.1 Place water in the vacuum flask at slightly above 102°F (39°C) so that the water will be at 102°F (39°C) at the time the maximum degree of evacuation is achieved by the vacuum source.

4.5.2.2 Begin applying vacuum.

4.5.2.3 If the vacuum source is capable of causing a vigorous boil to occur in water at 102°F (39°C) or less, the residual pressure within the system is 2.0 in. (50 mm) Hg or less and the vacuum source meets the requirements for this test method.

4.6 *Balance*, Class G2 in accordance with Tex-901-K, with a minimum capacity of 2,500 g.

4.7 *Masonry trowel and flat scoop.*

4.8 *Sample splitter or quartering machine.*

4.9 *Mercury thermometer*, marked in 2°F (1°C) divisions or less, or digital thermometer capable of measuring the temperature specified in the test procedure.

4.10 *Air circulating fan.*

4.11 *Large, flat-bottom pans.*

4.12 *Vacuum flasks*, of any capacity found suitable to condense water vapor and trap moisture to protect vacuum pump (optional).

4.13 *Stopwatch or timer.*

4.14 *Gloves.*

4.15 *Water bath with a Tank Heater and Circulator*, for calibration of metal pycnometer and for immersing the metal pycnometer and sample in water, while suspended. It should be equipped with an overflow outlet for maintaining a constant water level.

4.16 *Standard U.S. sieves,* as specified in procedure, meeting the requirements of Tex-907-K.

## 5. CALIBRATING METAL VACUUM PYCNOMETER

5.1 Perform this calibration procedure each day that the pycnometer is used.

5.2 Prepare and calibrate the metal pycnometer as follows, to assure that it is of definite and constant volume.

5.3 Determine the water temperature.

5.3.1 A water temperature of 77 ± 3°F (25 ± 2°C) is a standard calibration and test temperature.

5.3.2 The water temperatures used during the pycnometer calibration and the final weighing of the pycnometer containing evacuated mixture must be within 2°F (1°C).

5.4 Unplug or turn off the water circulator in the water bath while obtaining the submerged pycnometer weight. Tare the scale with the weighing apparatus suspended in water.

**Note 1**—Equip the scale with a suitable apparatus to permit weighing the metal pycnometer with sample while suspended in water.

5.5 Submerge the metal pycnometer in water by placing it into the water bath at an angle. This will prevent any air from remaining under the bottom of the metal pycnometer. Hang the metal pycnometer from the weighing apparatus and allow the scale to stabilize.

5.6 Weigh and record the weight to the nearest 0.1 g. Record weight as *D* in Section 7.

## 6. PROCEDURE

6.1 Obtain a representative sample. Minimum sample size requirements are given in Table 2.

6.2 Place sample in a large flat pan and warm in an oven until it becomes workable.

6.3 Heat sample to the minimum temperature and for the least amount of time necessary to separate the mix into individual aggregate particles. If using the theoretical maximum specific gravity in the calculation of laboratory molded density, cure the sample at the same temperature and for the same length of time as the sample used for molding.

6.4 Use a circular motion with a masonry trowel while exerting downward pressure to roll the aggregate and effectively break apart individual coated aggregates. It is important to separate the aggregates, particularly the fine material, to the greatest extent possible without fracturing particles in the process.

6.5 If the aggregate larger than 3/4 in. (19.0 mm) was removed from the laboratory-molded specimens, then sieve aggregate larger than 3/4 in. (19.0 mm) out of the sample.

**Note 2**−If a Rice gravity is needed to calculate the percent density of road cores for mixes that contain aggregate larger than 3/4 in. (19.0 mm), then perform an additional Rice gravity without removing the aggregate larger than 3/4 in. (19.0 mm).

6.6 Reduce the mix using a quartering machine or by thoroughly blending the material and taking small portions from several places from the entire area of the pan to achieve a sample size conforming to the requirements in Table 2.

6.7 *Alternative One for Determining the Weight of the Sample:*

6.7.1 Weigh the prepared sample at room temperature to the nearest 0.1g

6.7.2 Record the weight as *A* in Section 7.

6.7.3 Transfer the weighed sample into the metal pycnometer.

6.7.4 Take care not to lose any of the material

6.7.5 Proceed to Section 6.9.

6.8 *Alternative Two for Determining the Weight of the Sample:*

6.8.1 Fill the metal pycnometer approximately one third full with water at approximately the temperature used for calibration.

6.8.2 Place the metal pycnometer on the scale.

6.8.3 Zero out or tare the scale.

6.8.4 After the sample has cooled to room temperature, pour the sample into the metal pycnometer.

6.8.5 Record the weight as *A* in Section 7.

6.8.6 Remove the metal pycnometer from the scale and proceed to Section 6.9.

6.9 Cover the sample with water at approximately the temperature used for calibration.

6.9.1 As some cooling can occur during the evacuation procedure, a water temperature a few degrees above that used for calibration may help provide the desired water temperature at the time of weighing the evacuated pycnometer.

6.9.2 The water level must be adequate to submerge the entire sample (by approximately 1 in. [25 mm]) yet not be so high as to cause water to siphon into the vacuum lines during the test.

6.10 Place the flat plexiglass vacuum lid with O-ring on the metal pycnometer and place on vibrating table. Clamp to hold in place. Turn on the vacuum pump or water aspirator and lower the residual pressure within the system to 2.0 in. (50 mm) Hg pressure. This equates to a vacuum gauge reading of 27.9 in. (710 mm) Hg at normal sea level atmospheric pressure.

6.11 Turn the vibrating table on and maintain the residual pressure and agitation for 10 to 15 minutes.

**Note 3**—Water can suck into the aggregate, so the minimum time required to remove air from the sample is best.

6.11.1 If the mix looks lightly coated or the aggregate is absorptive, use 10 min.

6.11.2 If the mix looks well coated and has a thick film of asphalt, use 15 min.

6.12 After the 10 to 15 min. of agitation and evacuation, turn the vibrating table off, turn the vacuum or water aspirator off, and gently release the vacuum. Remove the metal pycnometer from the vibrating table and then remove the flat plexiglass vacuum lid.

6.13 Check the water temperature. It must be within 2°F (1°C) of the calibration temperature.

6.14 Unplug or turn off the water circulator in the water bath while obtaining the submerged sample weight. Tare the scale with the weighing apparatus suspended in water.

6.15 Submerge the metal pycnometer with sample in water by placing it into the water bath at an angle. This will prevent any air from remaining under the bottom of the metal pycnometer. Hang the metal pycnometer from the weighing apparatus and allow the scale to stabilize.

6.16 Weigh and record the weight to the nearest 0.1 g. Record weight as *E* in Section 7.

6.17 Perform the instructions in Sections 6.18–6.26 if the aggregate absorbs water during the test. This can occur when the surfaces of any absorptive aggregate are not completely coated or are coated very thinly with asphalt. This problem may increase when highly effective vacuum pumps are used and if the samples

remain exposed to this vacuum for an excessive time. Very porous aggregates, such as lightweight aggregates, are particularly prone to absorb water during this test.

6.18 Tare a large flat pan.

6.19 Pour the contents of the pycnometer into the pan. Rinse particles clinging to the wall of the pycnometer into the pan.

6.20 Decant the water from the pan over a No. 200 (75 µm) sieve, taking care to avoid loss of any of the sample.

6.21 Tilt the sample pan to further drain water to the bottom and place in front of an electric fan to remove surface moisture. Set the fan so that it will not cause movement of the fine particles of the mixture.

6.22 Remove water draining to the bottom of the pan with a suction bulb.

6.23 Stir the sample intermittently with a trowel until the sample is almost surface dry.

6.24 Increase the drying cycle to 15min. intervals, stirring for two min. every interval. Weigh after every other stirring. When the loss in mass is 0.5 g or less, the sample is surface dry. Record this weight as $A_{sd}$ in Section 7.

6.25 Verify the validity of the end-point by drying for an additional 30min. period when practical.

6.26 If a loss greater than 0.5 g occurs, continue drying until the new endpoint is reached. Record this new value as $A_{sd}$ in Section 7.

6.27 See notes in Section 10 for additional information.

## 7. CALCULATIONS

7.1 Calculate theoretical maximum specific gravity:

$$G_r = \frac{A}{D + A - E}$$

Where:

$G_r$ = theoretical maximum specific gravity

$A$ = weight of dry sample in air, g

$D$ = weight of calibrated pycnometer submerged in water, g

$E$ = weight of pycnometer containing sample while submerged in water, g

7.2 Calculate theoretical maximum specific gravity (corrected for water absorption during test):

$$G_{rc} = \frac{A}{D + A_{sd} - E}$$

Where:

$G_{rc}$ = theoretical maximum specific gravity corrected for water absorption during test

$A$ = weight of dry sample in air, g

$A_{sd}$ = weight of surface dry sample in air, g

*D* = weight of calibrated pycnometer submerged in water, g

*E* = weight of pycnometer containing sample while submerged in water, g

# PART III—USING A WIDE-MOUTH HAND-HELD GLASS PYCNOMETER

## 8. SCOPE

8.1 The wide-mouth hand-held glass pycnometer is no longer an accepted process.

8.2 Refer to Part II of this test procedure.

## 9. TEST RECORD FORMS

9.1 Use the following Excel forms (in conjunction with hot mix specifications) to calculate and report theoretical maximum specific gravity results:

- HMAC Properties and Gradation,
- HMAC Mixture Design,
- HMAC Mix Properties, and
- Quality Control/Quality Assurance (QC/QA) test data worksheets for 2004 Specifications or for 2014 Specifications.

## 10. NOTES

10.1 Values for $G_r$ and $G_{rc}$ are rarely equal, even when no water absorption occurs. The determination of the surface dry condition is usually, to some degree, inaccurate because moisture commonly contained inside fine aggregate conglomerates. For this reason, some values will tend to indicate more correction than is justified. The decision on which value to use must be based on the following factors:

10.1.1 *Aggregate Potential for Water Absorption:*

Other factors being equal, if the average aggregate water absorption is lower than accepted parameters during mixture design, the probability for absorption during this test diminishes.

10.1.2 *Asphalt Film Thickness:*

10.1.2.1 Mixtures with high asphalt contents will rarely require absorption correction.

10.1.2.2 High vacuum levels applied to highly absorptive aggregates may overcome this factor.

10.1.2.3 Lean mixtures will often require correction.

10.1.3 *Number of Fractured Aggregates:*

10.1.3.1 Some absorption will always occur when uncoated aggregate remains exposed to vacuum saturation procedures.

10.1.3.2 Consider both the number of these particles and their potential for absorption.

10.1.4 *Vacuum Level applied:*

10.1.4.1 Other factors being equal, highly effective vacuum pumps will cause more water absorption than less effective pumps or water aspirators.

10.1.5 *Difference Between $G_r$ and $G_{rc}$ Values:*

10.1.5.1 As the difference between $G_r$ and $G_{rc}$ values increases, confidence that significant water absorption has occurred also increases.

10.1.5.2 Make corrections when values vary by more than 1.0%.

10.1.5.3 Corrections of less than 0.3% are usually insignificant and exist only because of the inadequacy of the correction procedure.

10.1.5.4 Base decisions concerning variations between $G_r$ and $G_{rc}$ ranging from 0.3–1.0% on the first four factors.

10.1.5.5 Calculate the percentage difference:

$$\frac{G_r - G_{rc}}{G_{rc}} \times 100 = \%$$

10.2 When using a vacuum pump to create a partial vacuum on the sample contained in the pycnometer, close the system for periods during the test by closing the valve in the line leading from the vacuum pump. This will protect the pump from water vapors and it can be turned off if necessary. Restart the pump and reopen the valve when leaks in the system cause the absolute pressure to rise above 2.0 in. (50 mm) Hg.

10.3 Vacuum sources applying absolute pressure considerably below 2.0 in. (50 mm) Hg may reach the end-point more quickly than less effective pumps.

10.4 Treat mix used to perform Rice gravity calculations identically to mix used for molding for density.

10.5 The vacuum pump or water aspirator must be able to reduce the residual (absolute) pressure in the system to 2.0 in. (50 mm) Hg or less before the completion of the air evacuation process of the procedure. This equates to a vacuum gauge reading of 27.9 in. (710 mm) Hg or more at normal sea level atmospheric pressure. When a gauge is used, it is necessary to use a mercury manometer to establish the point on a vacuum gauge that equates to 2.0 in. (50 mm) Hg of residual (absolute) pressure.

10.5.1 This can be accomplished by pulling a residual (absolute) vacuum of 2.0 in. (50 mm) Hg as read on a mercury manometer that is placed in line with the vacuum gauge.

10.5.2 At this point, make a mark on the vacuum gauge and use this point as the minimum vacuum that must be pulled.

10.5.2.1 Vacuum gauges are not as precise as manometers and as such, the vacuum gauge should be calibrated with a manometer on a regular basis.

**Table 3**
**Pressure Conversions**

| % Vacuum | Absolute Pressure (mmHg) | Absolute Pressure (inHg) | Gauge Pressure (inHg) |
|---|---|---|---|
| 0.0 | 760.0 | 29.92 | 0.00 |
| 7.9 | 700.0 | 27.56 | 2.36 |
| 21.1 | 600.0 | 23.62 | 6.30 |
| 34.2 | 500.0 | 19.68 | 10.24 |
| 47.4 | 400.0 | 15.75 | 14.17 |
| 60.5 | 300.0 | 11.81 | 18.11 |
| 73.7 | 200.0 | 7.87 | 22.05 |
| 86.8 | 100.0 | 3.94 | 25.98 |
| 88.2 | 90.0 | 3.54 | 26.38 |
| 89.5 | 80.0 | 3.15 | 26.77 |
| 90.8 | 70.0 | 2.76 | 27.16 |
| 92.1 | 60.0 | 2.36 | 27.56 |
| 93.3 | 51.3 | 2.02 | 27.90 |
| 94.7 | 40.0 | 1.57 | 28.35 |
| 96.1 | 30.0 | 1.18 | 28.74 |
| 97.4 | 20.0 | 0.79 | 29.13 |
| 98.7 | 10.0 | 0.39 | 29.53 |
| 99.3 | 5.0 | 0.20 | 29.72 |
| 99.7 | 2.5 | 0.10 | 29.82 |
| 99.9 | 1.0 | 0.04 | 29.88 |
| 100.0 | 0.0 | 0.00 | 29.92 |

## 11. ARCHIVED VERSIONS

11.1 Archived versions are available.

# Tex-227-F (Part II)
# Theoretical Maximum Specific Gravity of Bituminous Mixtures

**Calculation for theoretical maximum specific gravity**

$$G_r = \frac{A}{D + A - E}$$

**Calculation theoretical maximum specific gravity (corrected for water absorption)**

$$G_{rc} = \frac{A}{D + A_{sd} - E}$$

**Where:**

$G_r$ = Theoretical maximum specific gravity
$G_{rc}$ = Theoretical maximum specific gravity corrected for water absorption
$A$ = Weight of dry sample in air
$D$ = Weight of calibrated pycnometer submerged in water
$E$ = Weight of pycnometer containing sample while submerged in water
$A_{sd}$ = Weight of surface dry sample in air

(A) Wt. of specimen _____

(D) Wt. of Pyc & Water _____

(E) Wt. of Pyc, Water & Sample _____

D + A – E _____

$G_r$ _____

(A) Wt. of specimen _____

($A_{sd}$) Wt. of Pyc & Water _____

(E) Wt. of Pyc, Water & Sample _____

D + $A_{sd}$ - E _____

$G_r$ _____

## Test Procedure for

# PREPARING CONTROL CHARTS FOR BITUMINOUS MIXTURE PAVING PROJECTS

## TxDOT Designation: Tex-233-F

***Effective Date: October 2016***

## 1. SCOPE

1.1 Use this method to graphically display and track bituminous mixture test results. In some cases, the charts will predict failure to meet specifications, allowing preventive intervention.

1.2 The values given in parentheses (if provided) are not standard and may not be exact mathematical conversions. Use each system of units separately. Combining values from the two systems may result in nonconformance with the standard.

## 2. PROCEDURE

2.1 Open the Control Chart Excel template (TxCC14.xlsm) to generate and report all results.

2.2 Use the Import button to import results directly from the QC/QA Excel template into the Control Chart template.

**Note 1**—The QC/QA data needs to come directly from the Tx2QCQA14.xlsm template.

**Note 2**—There must be a number in the "LOT NUMBER" field in the General worksheet tab of the 2014 QC/QA template. A dialog box will appear if there is no numerical value in this box or if text is used or included. The Lot Number from the 2014 QC/QA template must match the lot number entered in the Lot Information worksheet. For example, 1, 01, or 001 are acceptable for Lot 1.

2.3 After importing the data, use the Update button to ensure all data has been applied to the chart.

2.4 If an individual lot needs to be deleted from the Control Chart template, select the lot from the drop-down list and click the Delete Lot button. Use the Clear button to erase all data within the Control Chart template.

2.5 Select the item of interest from the “Plot What” drop-down list. All measured values and corresponding limits are plotted end-to-end for the entire length of the project.

**Note 3**—The Control Chart template can accommodate a maximum of 99 lots.

## 3. TEST RECORD FORMS

3.1 Use the Control Chart Excel template to generate and report all results.

3.1.1 Figure 1 shows an example of a control chart worksheet.

3.1.2 Charts may be attached, end-to-end, to extend the form-length to cover an entire project.

3.1.3 A separate chart is required for each mixture type and material property.

3.1.4 Post control charts on a wall in the plant laboratory where both Contractor and Department personnel can view them.

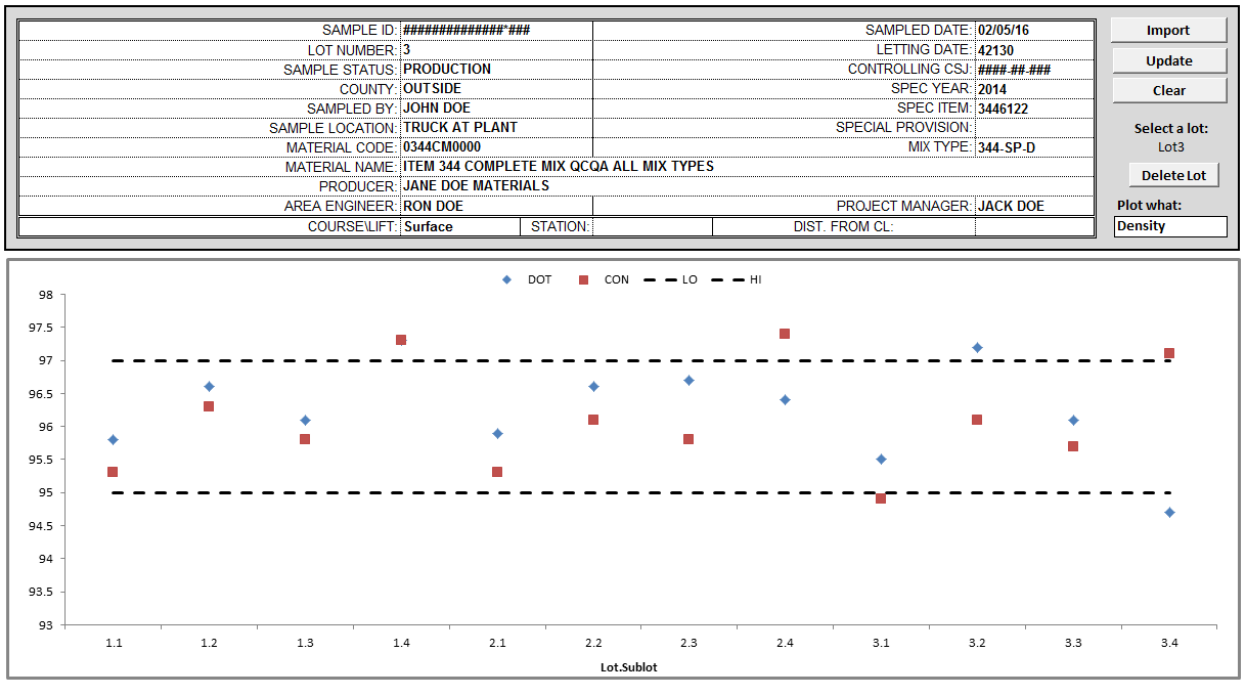


**Figure 1**—Bituminous Mixture Control Chart Example

## 4. ARCHIVED VERSIONS

4.1 Archived versions are available.

## Test Procedure for

# DETERMINING DRAINDOWN CHARACTERISTICS IN BITUMINOUS MATERIALS

## TxDOT Designation: Tex-235-F

***Effective Date: February 2016***

## 1. SCOPE

1.1 Use this test method to determine the amount of draindown in a laboratory or plant mixed bituminous sample when subjected to temperatures comparable to those encountered during production, storage, transport, and placement.

1.2 The test particularly applies to coarse graded mixtures such as stone matrix asphalt, coarse matrix high binder, and permeable friction course.

1.3 The values given in parentheses (if provided) are not standard and may not be exact mathematical conversions. Use each system of units separately. Combining values from the two systems may result in nonconformance with the standard.

## 2. APPARATUS

2.1 *Forced draft oven*, capable of maintaining the temperatures specified in this test procedure.

2.2 *Balance*, Class G2 in accordance with Tex-901-K.

2.3 *Metal or glass plates*, of appropriate size.

2.4 *Wire basket*, constructed with 0.25-in. sieve cloth, dimensions shown in Figure 1.

2.5 *Spatulas, trowels, bowls, and mixing pans*, as needed.

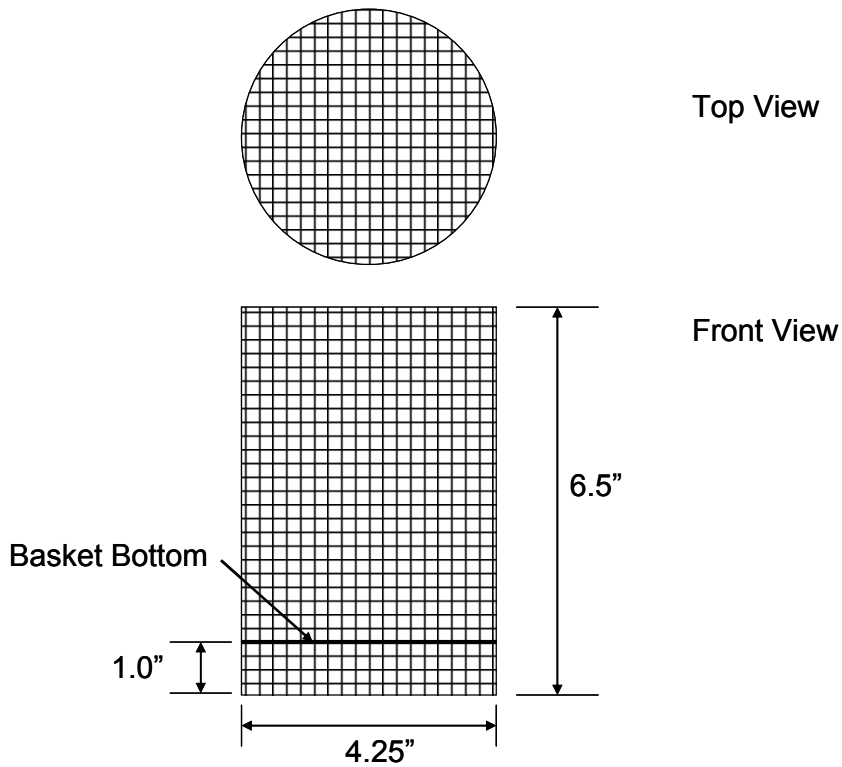


**Figure 1**—Wire Basket Assembly

## 3. PROCEDURE

3.1 Obtain a representative sample of:

- processed aggregates in accordance with Tex-221-F, or
- bituminous mixture in accordance with Tex-222-F.

3.1.1 For laboratory mixtures, dry the aggregate in an oven at a temperature between 38°C (100°F) and 150°C (302°F).

3.1.2 For plant mixtures, thoroughly mix, breaking up large lumps.

3.2 Prepare 2 samples by one of the following methods:

3.2.1 For laboratory mixtures, prepare samples of approximately 1200 g in accordance with Tex-205-F.

3.2.2 For plant mixtures, quarter the materials, blend thoroughly, and take small portions from several different locations covering the entire area of the pan. Prepare samples of approximately 1200 g.

3.3 Weigh a metal or glass plate to the nearest 0.1 g and record the weight as $P_1$ in Section 4.1.

3.4 Leave the plate on the balance, and place the wire basket on the plate. Tare the balance.

3.5 Add the plant or lab mix sample to the basket. Record the weight to the nearest 0.1 g as *S* in Section 4.1.

3.6 Place the plate-basket assembly containing the mixture into the oven for 1 hr. at the following temperatures.

3.6.1 For PFC and SMA mixtures, use 350 ± 5°F (177 ± 3°C).

3.6.2 For other mixtures, use their anticipated plant mixing temperature.

3.7 Remove the test sample from the oven. Remove the basket from the plate.

3.8 Carefully remove any aggregate that may have fallen onto the plate. Weigh the plate and record the weight as $P_F$ in Section 4.1

## 4. CALCULATIONS

4.1 Calculate the percent of mixture that drained:

$$\%\ Draindown = \frac{P_F - P_I}{S} \times 100$$

Where:
$P_F$ = final weight of metal or glass plate
$P_I$ = initial weight of metal or glass plate
$S$ = initial sample weight.

4.2 The reported results should represent the average of 2 samples. Report results to the nearest 0.01%.

## 5. ARCHIVED VERSIONS

5.1 Archived versions are available.

# Tex-235-F, Draindown

**Calculation**

$$\% \text{ Draindown} = \frac{P_F - P_I}{S} \times 100$$

**Where:**

$P_F$ = Final weight of metal or glass plate

$P_I$ = Initial weight of metal or glass plate

S = Initial sample weight

**Test Procedure for**

# DETERMINING ASPHALT CONTENT FROM ASPHALT PAVING MIXTURES BY THE IGNITION METHOD

**TxDOT Designation: Tex-236-F**

***Effective Date: July 2019***

## 1. SCOPE

1.1 Use Part I of this test method to determine the asphalt content of hot mix asphalt (HMA) paving mixtures, reclaimed asphalt pavement (RAP) stockpiles, and recycled asphalt shingles (RAS) stockpiles using an ignition oven. Use the remaining aggregate for sieve analysis in accordance with Tex-200-F.

1.2 Use Part II of this test method to determine aggregate gradation and asphalt content correction factors before the start of production. The type of aggregate in the mixture may affect the ignition procedure. Establish correction factors by testing a set of samples for each mix type produced to optimize accuracy.

1.3 The values given in parentheses (if provided) are not standard and may not be exact mathematical conversions. Use each system of units separately. Combining values from the two systems may result in nonconformance with the standard.

## 2. APPARATUS

2.1 *Ignition oven,* capable of:

2.1.1 Maintaining a temperature to cause combustion with an internal balance thermally isolated from the chamber accurate to 0.1 g. The balance must be capable of weighing a 4,000 g sample in addition to the sample baskets.

2.1.2 Providing an audible alarm and indicator light when the sample reaches constant weight.

**Note 1**—The oven door must automatically lock when the test procedure begins and must remain locked until the test procedure is completed.

2.1.3 Providing initial sample weight, sample weight loss, correction factor, corrected asphalt content (percent), and test time.

2.2 *Tempered stainless steel No. 8 (2.36 mm) mesh basket,* otherwise perforated basket, or combination of baskets. The basket must incorporate a design that confines the sample during testing.

2.3 *Tempered stainless steel catch pan*, to fit under the basket assembly.

2.4 *Oven*, capable of maintaining a minimum temperature of 325 ± 5°F (163 ± 3°C).

2.5 *Balance,* Class G2, in accordance with Tex-901-K, with a minimum capacity of 17.6 lb. (8 kg) for weighing sample in baskets.

## 3. SAFETY EQUIPMENT

3.1 *Safety glasses or face shield.*

3.2 *High temperature gloves.*

3.3 *Long sleeve jacket.*

3.4 *Heat-resistant surface,* capable of withstanding heat from the sample baskets.

3.5 *Protective cage,* capable of surrounding the sample baskets.

## 4. MISCELLANEOUS EQUIPMENT

4.1 *Pan for transferring samples after ignition.*

4.2 *Spatulas.*

4.3 *Bowls.*

4.4 *Wire brushes.*

## 5. REPORT FORMAT

5.1 The Correction Factor Calculation Report is an Excel template containing the following worksheets:

- Asphalt Content and Combined Aggregate Gradation (Tx236) and
- Summary Sheet (Summary).

5.2 For hot-mix asphalt (HMA) mixtures, use the QC/QA Excel template for the Ignition Oven Method in conjunction with the HMA specification. Refer to the Instructions tab for guidelines on how to use the template.

5.3 Use the Mix Design Excel template to prepare blank samples when establishing correction factors.

## 6. SAMPLE PREPARATION

6.1 *Asphalt Paving Mixtures:*

6.1.1 Produce a sample in accordance with Tex-205-F or quarter a sample in accordance with Tex-222-F.

6.1.1.1 When the mixture is not sufficiently workable to separate the mix with a spatula or trowel, place it in a large flat pan and warm to 250 ± 5°F (121 ± 3°C) for 30 min.

**Note 2**—Do not heat sample for more than one hr.

6.1.1.2 For microsurfacing production mix, place the mixture in a large flat pan and dry to constant weight at 230 ± 10°F.

6.1.1.3 The mixture type controls the required sample size, as shown in Table 1.

**Table 1**
**Required Weight of Sample**

| Mixture Type | Required Weight of Sample, g |
|---|---|
| Type A, SP-A | 3,000–4,000 |
| Type B, SP-B | 2,000–3,000 |
| Type C, PFC (PG 76), SP-C, CMHB-C, SMA-C, SMA-D, SMAR-C, UTBWC-C, TBPFC (PG 76) | 1,000–2,000 |
| Type D, PFC (A-R), SP-D, CMHB-F, SMA-F, UTBWC-B, TBPFC (A-R) | 1,200–1,500 |
| Type F, SMAR-F, Microsurfacing, CAM, UTBWC-A, TOM-C, TOM-F | 1,000–1,200 |

6.1.2 Sample sizes should not be more than 400 g greater than the maximum required sample mass as shown in Table 1. Large samples of fine mixes tend to result in incomplete ignition of the asphalt.

**Note 3**—When the mass of the sample exceeds the capacity of the equipment used, divide the sample into suitable increments. Appropriately combine the results for calculating the asphalt content (weighted average).

6.1.3 Verify that the mixture contains no more than 0.2% of moisture by weight in accordance with Tex-212-F, Part II. Do not use the same sample used for moisture determination as used for asphalt content determination.

6.2 *Recycled Materials Samples:*

6.2.1 Take a representative sample from the recycled material stockpile in accordance with Tex-222-F.

6.2.2 Oven-dry the sample to constant weight at 140 ± 5°F (60 ± 3°C).

6.2.3 Quarter a test sample to the required size shown in Table 2.

6.2.4 Verify that the mixture contains no more than 0.2% of moisture by weight in accordance with Tex-212-F, Part II. Do not use the same sample used for moisture determination as used for asphalt content determination.

**Table 2**
**Required Weight of Recycled Material Sample**

| Recycled Material Type | Required Weight of Sample, g |
|---|---|
| Reclaimed Asphalt Pavement (RAP)[1] | 1,000–4,000 |
| Recycled Asphalt Shingles (RAS)[2] | 500–700 |

1. Refer to Table 1 for required sample weights.
2. Sample size exceeding the required weight above may not completely ignite the asphalt.

# PART I—DETERMINE ASPHALT CONTENT BY IGNITION METHOD

## 7. SCOPE

7.1 Use this procedure to determine the asphalt content of hot mix asphalt (HMA) paving mixtures using an ignition oven. Use the remaining aggregate for sieve analysis in accordance with Tex-200-F.

## 8. PROCEDURE

8.1 Pre-heat the ignition oven according to the manufacturer's recommendations.

8.2 Determine and record the weight of the basket assembly to the nearest 0.1 g.

8.3 Place the loose mixture directly into the sample baskets.

**Note 4**—Reheat the sample in a 250°F (121°C) oven for 30 min. if it gets cold. Do not reheat microsurfacing, limestone rock asphalt (LRA), or hot-mix cold-laid samples. Do not preheat the sample baskets.

8.4 Evenly distribute the sample in the basket assembly, keeping the material away from the edges of the basket.

8.5 Weigh and record the sample and basket assembly to the nearest 0.1 g.

8.6 Calculate and record the initial weight of the sample (total weight minus the weight of the sample basket assembly) and designate as $W_S$ in Section 11.1.

8.7 Input $W_S$ into the ignition oven controller. Verify entry of the correct weight.

8.8 Open the chamber door and place the sample and basket assembly in the ignition oven.

**Note 5**—Failure of the oven scale to stabilize may indicate that the sample basket assembly is contacting the oven wall. If this occurs, adjust the sample basket inside the oven.

8.9 Close the chamber door and start the test.

**Note 6**—This should lock the oven chamber for the duration of the test.

8.10 Allow the test to continue until the stable light and audible stable indicator indicate the test is complete.

8.11 Press the start/stop button.

**Note 7**—This should unlock the oven chamber.

8.12 Open the chamber door, remove the sample, and allow it to cool to room temperature (approximately 45 min.)

**Note 8**—Do not use a fan to assist in cooling the sample to room temperature due to the possibility of losing fines.

8.13 Weigh the sample and basket assembly after ignition to the nearest 0.1 g.

8.14 Calculate and record the final weight of the sample (total weight from Section 8.13 minus the weight of the sample basket assembly) and designate this weight as $W_A$ in Section 11.1.

8.15 Calculate the asphalt content of the sample according to Section 11.1.

**Note 9**—Asphalt content reported by the ignition oven may be used if proven accurate.

8.16 Empty the contents of the basket into a flat pan. Use a small wire sieve brush to ensure removal of any residual fines from the basket. Add those fines to the contents in the flat pan.

8.17 Use the remaining aggregate for the sieve analysis in accordance with Tex-200-F.

# PART II—DETERMINE CORRECTION FACTORS

## 9. SCOPE

9.1 Use this test method to determine aggregate gradation and asphalt content correction factors before the start of production. The type of aggregate in the mixture may affect the ignition procedure. Establish correction factors by testing a set of samples for each mix type produced to optimize accuracy.

## 10. PROCEDURE

10.1 A Level 2-certified technician must prepare one blank sample in the laboratory in accordance with Tex-205-F, using the Blank Weigh Up worksheet in the Mix Design Excel template. Determine the sample size for the blank sample in accordance with Tex-200-F, Table 1.

**Note 10**—Do not add any asphalt binder, fibers, or any recycled materials to the blank sample. Do not perform the ignition oven procedure with the blank sample.

10.2 Perform a washed sieve analysis on the blank sample in accordance with Tex-200-F, Part II.

**Note 11**—Enter the individual or cumulative weight of aggregate retained on each sieve on the Asphalt Content and Combine Aggregate Gradation worksheet.

10.3 When applicable, enter the gradation of any recycled material used in the mixture design, such as RAP or RAS, in the Asphalt Content and Combined Aggregate Gradation worksheet, under the Recycled Materials Section. Use the gradation of the recycled material determined for the mixture design in accordance with Tex-204-F.

**Note 12**—The Asphalt Content and Combined Aggregate Gradation worksheet calculates the combined gradation of the blank sample and recycled materials, when applicable.

**Note 13**—The combined gradation, including the use of any recycled materials, must fall within the master gradation band of the specification used for the project.

10.4 Prepare a "butter batch mix" at the design optimum asphalt content and discard before mixing any other samples for determining correction factors.

**Note 14**—A "butter batch mix" is a trial batch of asphalt and aggregate design mixture used to coat the mixing bowl and whips with asphalt. This helps prevent a loss of asphalt due to adhesion on the bare walls of the bowl or in the mixing whips to ensure an accurate asphalt content of the samples used to determine correction factors.

10.5 Use the Weigh Up worksheet in the Mix Design Report to prepare two samples in the laboratory in accordance with Tex-205-F. Determine the sample size in accordance with Section 6.1.1.3.

- two at the design optimum asphalt content

**Note 15**— Add the recycled material when preparing the samples if applicable.

10.6 Perform the ignition oven procedure as described under Section 8 with the samples prepared in Section 10.5.

10.7 Perform a dry gradation sieve analysis in accordance with Tex-200-F, Part I, on the residual aggregate for each ignited sample from Section 10.6.

**Note 16**—Enter the individual or cumulative weight of aggregate retained on each sieve on the Asphalt Content and Combine Aggregate Gradation worksheet.

10.8 *Determining Asphalt Content Correction Factor:*

10.8.1 Determine the asphalt content for each ignited sample in Section 10.6 in accordance with Section 11.1.

10.8.2 Use the Asphalt Content and Combined Aggregate Gradation worksheet to subtract the measured asphalt content for each ignited sample determined in Section 10.8.1 from the actual asphalt content. Average the two measured differences to determine the asphalt content correction factor.

**Note 17**—When fibers are added to the mixture, the asphalt content correction factor takes into account the percent fibers in the mixture so that the fibers are excluded from the binder content determination.

10.8.3 If Section 10.8 yielded an asphalt correction factor that was greater than 0.3%, use the Back Calculated Rice Method in Section 10.9 to verify the asphalt content.

**Note 18**—The type of aggregate in the mixture may affect the ignition procedure. Establish standard Rice values by testing a set of known asphalt contents from a laboratory produced sample. Compare production samples to these standards for verification.

10.9 *Verifying Asphalt Content using the Back Calculated Rice Method:*

10.9.1 Using the current design, produce a laboratory mixture at the design optimum asphalt content in accordance with Tex-205-F. Prepare enough material to test three $G_r$ samples in accordance with Tex-227-F.

10.9.2 During production, compare the production $G_r$ to the average $G_r$ obtained in part 10.9.1.

10.9.3 Use the Tex236 template to enter these values and verify asphalt contents.

10.10 *Determining Aggregate Gradation Correction Factors:*

10.10.1 Use the Asphalt Content and Combined Aggregate Gradation worksheet to subtract the gradation determined in Section 10.7 (ignited samples) for each sieve size from each corresponding sieve size of the combined gradation determined in Section 10.3 (blank samples and recycled material).

10.10.2 Average the two measured differences for each sieve size to determine the aggregate gradation correction factor for each sieve size. Report the correction factors in percent passing.

10.11 Use the Summary worksheet to report the asphalt content and aggregate gradation correction factors.

**Note 19**—If the aggregate correction factor for a sieve is historically less than 0.5%, a zero correction factor can be used.

## 11. CALCULATIONS

11.1 Calculate the asphalt binder content of the sample.

11.1.1 For hot-mix asphalt (HMA), LRA, hot-mix cold-laid, and recycled materials:

$$AC\% = \left[\frac{W_S - W_A}{W_S}\right] * 100$$

11.1.2 For microsurfacing mixtures:

$$AC\% = \left[ \frac{W_S - W_A}{W_A} \right] * 100$$

Where:

*AC%* = measured asphalt content

$W_A$ = total weight of aggregate remaining after ignition, g

$W_S$ = total weight of the HMA sample before ignition, g

11.2 Report ignition oven test results to the nearest 0.1%.

## 12. ARCHIVED VERSIONS

12.1 Archived versions are available.

# Tex-236-F (Part I)
# Determining Asphalt Content by the Ignition Method

**Calculation for the asphalt binder content of the sample**

$$AC\% = \frac{W_S - W_A}{W_S} \times 100$$

**Where:**

AC% = Measured asphalt content
$W_A$ = Total weight of aggregate remaining after ignition
$W_S$ = Total weight of HMA sample before ignition

Wt. of basket: _____

Wt. of sample: _____

Wt. of sample and basket before ignition: _____

Wt. of sample and basket after ignition: _____

Wt. of sample after ignition: _____

% AC: _____

**Test Procedure for**

# COMPACTING BITUMINOUS SPECIMENS USING THE SUPERPAVE GYRATORY COMPACTOR (SGC)

**TxDOT Designation: Tex-241-F**

***Effective Date: July 2019***

## 1. SCOPE

1.1 Use this test method to:

- compact cylindrical specimens of hot-mix asphalt (HMA) using the Superpave gyratory compactor;
- prepare specimens for determining the mechanical and volumetric properties of HMA; and

  **Note 1**—The specimens simulate density, aggregate orientation, and structural characteristics obtained in the actual roadway when proper construction procedure is used in the placement of the paving mix.
- monitor the density of test specimens during their preparation and for field control of an HMA production process.

1.2 Refer to Table 1 for Superpave and conventional mix nomenclature equivalents. Replace conventional nomenclature with Superpave nomenclature when required.

**Table 1**
**Nomencablatures and Definitions**

| Nomenclatures | | Definitions |
|---|---|---|
| Conventional | Superpave | |
| $G_a$ | $G_{mb}$ | Bulk specific gravity of the compacted mixture |
| $G_r$ | $G_{mm}$ | Theoretical maximum specific gravity |

1.3 The values given in parentheses (if provided) are not standard and may not be exact mathematical conversions. Use each system of units separately. Combining values from the two systems may result in nonconformance with the standard.

## 2. APPARATUS

2.1 *Superpave gyratory compactor (SGC).*

2.1.1 The compactor is an electrohydraulic or electromechanical compactor with ram and ram heads that are restrained from revolving during compaction.

2.1.2 The axis of the ram is perpendicular to the platen of the compactor.

2.1.3 The compactor tilts the specimen molds at an internal angle of 1.16 ± 0.02° (20.2 ± 0.35 mrad) and gyrates specimen molds at a rate or 30.0 ± 0.5 gyrations per minute throughout compaction.

2.1.4 The compactor is designed to permit the specimen mold to revolve freely on its tilted axis during gyration.

2.1.5 The ram applies and maintains a pressure of 600 ± 18 kPa (87 ± 2 psi) perpendicular to the cylindrical axis of the specimen during compaction.

**Note 2** —This stress calculates to 10,600 ± 310 N (2,383 ± 70 lbf) total force for 150 mm (5.912 in.) specimens.

2.2 *Specimen height measurement and recording device.*

2.2.1 When monitoring specimen density during compaction, provide a means to continuously measure and record the height of the specimen to the nearest 0.1 mm during compaction, once per gyration.

**Note 3** —Specimen height monitoring is for informational purposes only during design.

2.2.2 The system should be capable of downloading or printing test information, such as specimen height per gyration. In addition to a printer, the system may include a computer and suitable software for data acquisition and reporting.

2.3 *Specimen molds.*

2.3.1 Specimen molds must have steel walls that are at least 7.5 mm (0.3 in.) thick and have a minimum Rockwell hardness HR-C 48.

2.3.2 Molds must have an inside diameter of 149.90–150.00 mm (5.901–5.912 in.) and be at least 250 mm (10 in.) high.

2.3.3 The inside finish of the molds must have a root mean square (rms) of 1.60 µm or smoother.

**Note 4** —Measure smoothness according to ANSI B46.1. One source of supply for a surface compactor, which is used to verify the rms value of 1.60 µm, is GAR Electroforming, Danbury, Connecticut.

2.4 *Ram heads and mold bottoms.*

2.4.1 Ram heads and mold bottoms must be fabricated from steel with a minimum Rockwell hardness of C48.

2.4.2 The ram heads must be perpendicular to its axis.

2.4.3 The platen side of each mold bottom must be flat and parallel to its face.

2.4.4 All ram and base plate faces (the sides presented to the specimen) must be ground flat to meet smoothness the requirements of ANSI B 46.1 and must have a diameter of 149.50–149.75 mm (5.885–5.896 in.)

2.5 *Mercury thermometer,* marked in 5°F (3°C) divisions or less, or a digital thermometer capable of measuring the temperature specified in this test procedure.

2.6 *Balance,* Class G2 in accordance with Tex-901K, with a minimum capacity of 10,000 g.

2.7 *Oven,* capable of maintaining a temperature of at least 325 ± 5°F (163 ± 3°C).

2.8 *Pans,* metal, with flat bottom.

2.9 *Scoop, spatula, trowel.*

2.10 *Paper disks.*

2.11 *Insulating gloves.*

2.12 *Lubricating materials.*

## 3. SAFETY PRECAUTIONS

3.1 Use standard safety precautions and protective clothing when handling hot asphalt mixtures, molds, and equipment.

## 4. CALIBRATION

4.1 Items requiring periodic verification of calibration include:

- ram pressure,
- angle of gyration,
- gyration frequency,
- LVDT (or other means used to continuously record the specimen height), and
- oven temperature.

4.2 Verification of the mold and platen dimensions and the inside finish of the mold are also required.

4.3 When the computer and software options are used, periodically verify the data processing system output using a procedure designed for such purposes.

4.4 The manufacturer, other agencies providing such services, or in-house personnel may perform the verification of the calibration system standardization and quality checks. Frequency of verification must follow manufacturer's recommendations.

## 5. PREPARATION OF THE SGC

5.1 Turn on the compactor and allow it to warm up before the asphalt concrete mixture is ready for placement in the mold.

5.2 Verify settings for angle and pressure.

5.3 Select gyration or height mode. Enter the design number of gyrations or required specimen height according to the specification or test procedure.

**Note 5** —Gyration mode is normally used when molding samples for volumetric properties. Height mode is normally used when molding samples for performance testing such as Hamburg, Overlay, Cantabro, and IDT.

5.4 Lubricate bearing surfaces as needed.

5.5 Lubricate the surface of the rotating base and the surface of the four rollers.

5.6 Follow the instructions in Sections 5.6.1–5.6.2 when monitoring the specimen height.

5.6.1 Before placing the material in the mold, turn on the device for measuring and recording the height of the specimen. Verify that the readout is in the proper units (mm) and that the recording device is ready.

5.6.2 If using a computer, prepare it to record the height data and enter the header information for the specimen.

## 6. MIXTURE PREPARATION

6.1 For laboratory-produced mixtures, proceed to Section 6.2. For plant-produced mixtures, proceed to Section 6.3. For mixtures requiring re-heating, proceed to Section 6.4.

**Note 6** —Mixtures requiring re-heating are defined as plant or lab mixtures that will be cooled to ambient temperature and transported to another laboratory for testing.

6.2 *Laboratory-Produced Mixtures:*

6.2.1 Combine aggregates and prepare the laboratory mixture as described in Tex-205-F.

6.2.2 Split the mixture into the appropriate sample size.

**Note 7** —The sample weight of test specimens will vary based on the selected compaction method and the test to be performed. If a target density is desired for performance testing, adjust the sample weight to create a given density for a specified height. If the specimens are to be used for determining volumetric properties, adjust the sample weight to yield results based on gyration control.

6.2.3 Proceed to Section 6.5.

6.3 *Plant-Produced Mixtures:*

6.3.1 Sample the plant-produced mixture in accordance with Tex-222-F.

6.3.2 Split the mixture into the appropriate sample size. Refer to Note 7.

6.3.3 Proceed to Section 6.5.

6.4 *Plant-Produced or Lab-Produced Mixtures Requiring Re-Heating:*

6.4.1 For plant-produced mixtures, sample the mixture in accordance with Tex-222-F. For lab-produced mixtures, combine aggregates and prepare the laboratory mixture as described in Tex-205-F.

6.4.2 Transfer the sample to a suitable container for shipping and labeling. The sample thickness in the container must not exceed 3 in.

**Note 8** —Recommended sampling containers are paper bags or cardboard boxes.

6.5 Select the compaction temperature from Table 2 based on the asphalt binder specified on the plans. Use the target discharge temperature as the compaction temperature when it is less than the temperature shown in Table 2.

**Note 9** —If using reclaimed asphalt pavement (RAP) or recycled asphalt shingles (RAS) and a substitute PG binder instead of the PG binder originally specified, defer to the originally specified binder grade when selecting the compaction temperature.

6.6 Place the compaction mold, base, and the top plate in an oven at the selected compaction temperature for a minimum of 60 min. before compaction.

6.7 Place the material into an oven at the selected compaction temperature. For pre-weighed lab or plant mix samples, proceed to Section 6.7.1. For shipped lab or plant mix that requires reheating, proceed to Section 6.7.2.

6.7.1 For pre-weighed lab or plant mix samples, cure the mix in the oven for 2 hr. ± 5 min. Monitor the sample mixture until it reaches the specified compaction temperature, mold the specimen, and proceed to Section 7.

6.7.2 When receiving shipped lab or plant mix that requires reheating, cure the mix in the oven for 1.5 hr. ± 5 min. Remove the sampled material from the containers and place it into a large pan. Thoroughly mix the sample and split into the appropriate sample size. Place the split samples back into the oven. Refer to Note 7. Monitor the sample mixture until it reaches the specified compaction temperature, mold the specimen, and proceed to Section 7.

## 7. COMPACTION TEMPERATURES

7.1 Use the compaction temperatures in Table 2 when molding samples. Use the same temperature for both curing and compaction of these mixtures.

7.2 Compaction temperatures not listed in Table 2 may be used when shown on the plans or approved by the Engineer. For guidance on materials not listed in Table 2 or materials containing modifying additives, RAP, or RAS, consult the Flexible Pavements Section of the Materials and Tests Division.

**Table 2**
**Curing and Compaction Temperatures**

| Binder[1] | Temperature, °F[2] |
|---|---|
| PG 58 - 28 | 250 |
| PG 64 - 22 | 250 |
| PG 64 - 28 | 275 |
| PG 70 - 22 | 275 |
| PG 70 - 28 | 300 |
| PG 76 - 22 | 300 |
| PG 76 - 28 | 300 |
| Asphalt Rubber (A-R) | 300 |

*Note: Mixtures must be compacted at the selected compaction temperature within a tolerance of ± 5°F (± 3°C).*

1. If using RAP or RAS and a substitute PG binder instead of the PG binder originally specified on the plans, defer to the originally specified binder grade when selecting the compaction temperature.
2. Use the target discharge temperature when it is less than the compaction temperature shown.

## 8. PROCEDURES

8.1 *Compaction:*

8.1.1 Use the design number of gyrations ($N_{des}$) or height for compaction according to the specification or as shown on the plans.

**Note 10** —When the mixture appears dry and lacking asphalt, lower the $N_{des}$ value to increase the optimum asphalt content of the mixture.

8.1.2 Following oven curing, remove the heated mold and base plate from the oven and place a paper disk on the bottom of the mold.

8.1.3 Place the mixture into the mold in one lift. Take care to avoid segregation in the mold.

8.1.4 After all the mix is in the mold, level the mix with a spatula and place another paper disk and the top plate on the leveled material.

8.1.5 Load the specimen mold into the compactor and center the mold under the loading ram.

8.1.6 Press the start button to lower the ram. The pressure on the specimen should reach 600 ± 18 kPa (87 ± 2 psi).

8.1.7 The compactor should then apply a 1.16 ± 0.02° (20.2 ± 0.35 mrad) internal angle to the mold assembly and begin the gyratory compaction.

8.1.8 Allow compaction to proceed until completion of the specified number of gyrations or height and until the gyratory mechanism shuts, off.

8.1.8.1 When monitoring the specimen height, record the specimen height to the nearest 0.1 mm (0.004 in.) after each revolution.

8.1.9 Once the machine removes the angle from the mold assembly and raises the loading ram, remove the mold from the compactor, and extrude the specimen from the mold.

**Note 11** —Do not immediately extrude the specimen from the mold for lean, rich, and tender mixtures, for mixtures containing asphalt rubber binder, or for mixtures compacted to a density less than 82% to prevent deformation of the specimen. Allow the mold to cool for approximately 10 min. or more in front of a fan.

8.1.10 Remove the paper disks from the top and bottom of the specimens.

**Note 12** —When molding multiple specimens, place the mold in the oven for at least 5 min. before reusing. The use of multiple molds will expedite the compaction process.

8.2 *Density:*

8.2.1 Use the maximum specific gravity ($G_r$) of the loose mix determined in accordance with Tex-227-F using a companion sample. For permeable friction course (PFC) mixtures, use a back-calculated $G_r$ in accordance with Tex-207-F.

**Note 13** —Oven-cure the companion sample at the same temperature and for the same length of time as the compaction sample.

8.2.2 Record the mass of the extruded specimen to the nearest tenth gram and determine the bulk specific gravity ($G_a$) of the extruded specimen in accordance with Tex-207-F.

8.2.3 Calculate the relative density of the extruded specimen ($\%G_{mm}$) in accordance with Section 9.1.

**Note 14** —Estimations of the relative density of the specimen can be made at any point in the compaction process based on the specimen height accordance with Section 9.2.

## 9. CALCULATIONS

9.1 Calculate $\%G_{mm}$:

$$\%G_{mm} = \frac{G_a}{G_r} * 100$$

Where:

$\%G_{mm}$ = relative density of the extruded specimen expressed as a percent of the theoretical maximum specific gravity

$G_a$ = bulk specific gravity of the extruded specimen

$G_r$ = theoretical maximum specific gravity of the mix

9.2 Estimate the percent compaction ($\%G_{mmx}$) at any point in the compaction process:

$$\%G_{mmx} = \frac{G_a h_m}{G_r h_x} \times 100$$

Where:

$\%G_{mmx}$ = relative density expressed as a percentage of the theoretical maximum specific gravity

$G_a$ = bulk specific gravity of the extruded specimen

$G_r$ = theoretical maximum specific gravity of the mix

$h_m$ = height of the extruded specimen, mm

$h_x$ = height of the specimen after "x" gyrations, mm

## 10. ARCHIVED VERSIONS

10.1 Archived versions are available.

**Test Procedure for**

# HAMBURG WHEEL-TRACKING TEST

**TxDOT Designation: Tex-242-F**

***Effective Date: July 2019***

## 1. SCOPE

1.1 This test method determines the premature failure susceptibility of bituminous mixtures due to weakness in the aggregate structure, inadequate binder stiffness, or moisture damage, and other factors including inadequate adhesion between the asphalt binder and aggregate.

1.2 The values given in parentheses (if provided) are not standard and may not be exact mathematical conversions. Use each system of units separately. Combining values from the two systems may result in nonconformance with the standard.

## 2. APPARATUS

2.1 *Wheel-Tracking Device*—an electrically powered device capable of moving a steel wheel with a diameter of 8 ± 0.08 in. (203.2 ± 2.0 mm) and width of 1.85 in. (47 mm) over a test specimen.

2.1.1 The load applied by the wheel must be 158 ± 5 lb. (705 ± 22.2 N).

2.1.2 The wheel must reciprocate over the test specimen, with the position varying sinusoidally over time.

2.1.3 The wheel must be capable of making 52 ± 2 passes across the test specimen per min.

2.1.4 The wheel must reach maximum speed, approximately 1.0 ft./sec. (0.305 m/s), at the midpoint of the combined specimens.

2.2 *Temperature Control System*—a water bath capable of controlling the test temperature within ± 4°F (2°C) over a range of 77 to 158°F (25 to 70°C).

2.2.1 The water bath must have a mechanical circulating system to stabilize temperature within the specimen tank.

2.3 *Rut Depth Measurement System*—a Linear Variable Differential Transducer (LVDT) device capable of measuring the rut depth induced by the steel wheel within 0.0004 in. (0.01 mm), over a minimum range of 0.8 in. (20 mm).

2.3.1 The system should measure the rut depth at 11 different locations in the wheel's path on the specimens as shown in Figure 1.

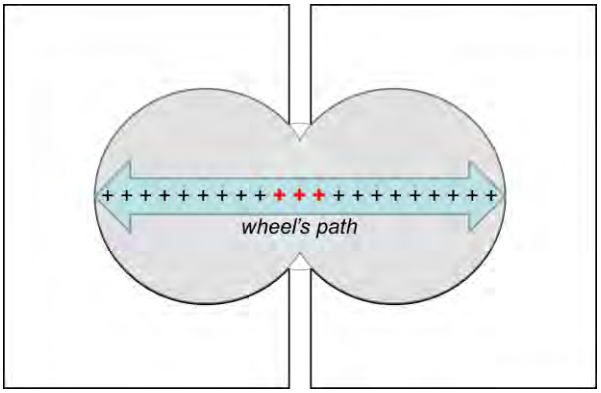


**Figure 1—**Schematic of Rut Depth Measurement Points

2.3.2 The system must take rut depth measurements at least every 100 passes of the wheel.

2.3.3 The system must be capable of measuring the rut depth without stopping the wheel. Reference this measurement to the number of wheel passes.

2.3.4 The system must have a fully automated data acquisition and test control system (computer included).

2.4 *Wheel Pass Counter*—a non-contacting solenoid that counts each wheel pass over the test specimen.

2.4.1 Couple the signal from this counter to the rut depth measurement, allowing the rut depth to be expressed as a fraction of the wheel passes.

2.5 *Specimen Mounting System*—a stainless steel tray that can be mounted rigidly to the machine in the water bath.

2.5.1 This mounting must restrict shifting of the specimen during testing.

2.5.2 The system must suspend the specimen, allowing a minimum of 0.79 in. (20 mm) of free circulating water on all sides of the mounting system.

2.6 *Masonry Saw.*

## 3. MATERIALS

3.1 *Three high-density polyethylene molds,* to secure circular, cylindrical test specimens. Use one mold for cutting the specimen, as shown in Figure 2, and the other two for performing the test, as shown in Figure 3.

3.2 *Capping compound,* able to withstand 890 N (200 lb.) load without cracking.

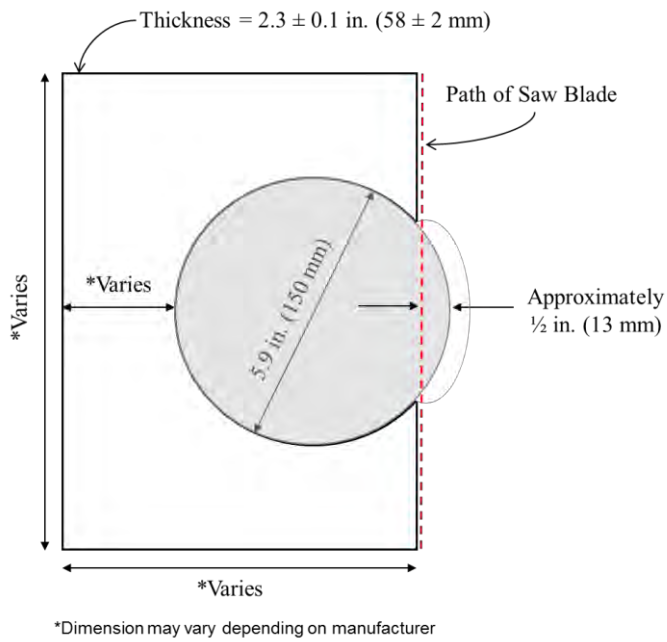


**Figure 2—**Schematic of Specimen Cutting Setup

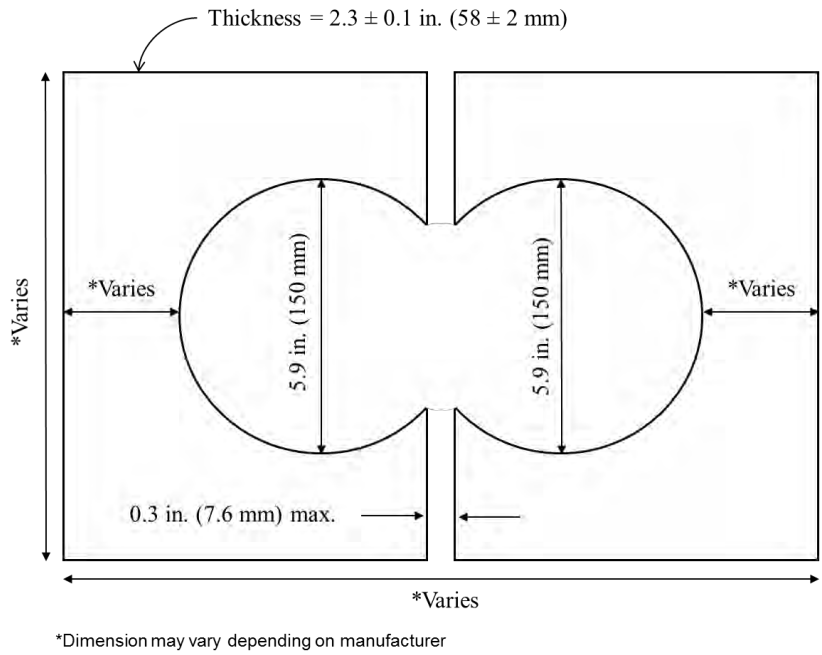


**Figure 3—**Top View of Test Specimen Configuration for the Hamburg Wheel-Tracking Device

## 4. SPECIMENS

4.1 *Laboratory-Molded Specimens*—Prepare two specimens in accordance with Tex-241-F. Specimen diameter must be 5.9 in. (150 mm), and height must be 2.4 ± 0.1 in. (62 ± 2 mm).

4.1.1 Density of test specimens must be 93 ± 1%, except for Permeable Friction Course (PFC) mixtures and Crack Attenuating Mix (CAM).

**Note 1**—Mixture weights for laboratory-molded specimens that achieve the density requirement typically vary between 2,400 and 2,600 g.

4.1.2 For PFC mixtures, mold test specimens to 50 gyrations (Ndesign).

**Note 2**—Mixture weights for laboratory-molded PFC specimens that achieve the required specimen height at Ndesign typically vary between 2,000 and 2,200 g.

4.1.3 For CAM mixtures, mold test specimens to 95 ± 1% density.

**Note 3**— Mixture weights for laboratory-molded specimens that achieve the density requirement typically vary between 2,400 and 2,600 g.

4.2 *Core Specimens*—Specimen diameter must be 5.7 ± 0.2 in. (145 ± 5 mm). There is not a specific density requirement for core specimens.

**Note 4**—Use a 6 in. nominal core bit (outside diameter) to sample cores for this test.

## 5. PROCEDURE

5.1 *Laboratory-Molded Mixtures:*

5.1.1 Mold two specimens in accordance with Section 4.

5.1.2 Calculate the density of the specimens in accordance with Tex-207-F and Tex-227-F.

**Note 5**—Calculate the bulk specific gravity ($G_a$) of PFC specimens using dimensional analysis in accordance with Tex-207-F, Part VIII.

5.1.3 Allow the specimens to stand at room temperature (77 ± 3°F) for a minimum of 24 hr. before testing.

5.1.4 Test laboratory-molded specimens within three days of molding.

5.2 *Roadway Cores:*

5.2.1 Trim the bottom of the core to remove unwanted paving layers.

5.2.2 For cores greater than 2.5 in. (64 mm) in height, trim the bottom of the core to achieve a 2.4 ± 0.1 in. (62 ± 2 mm) total core height.

5.2.3 For cores less than 2.3 in. (60 mm) in height:

- mix capping compound,
- place the core with surface facing downward in a 6-in. diameter plastic mold,
- spread the capping compound on top of the core to achieve a 2.4 ± 0.1 in. (62 ± 2 mm) total core height,
- allow the capping compound to dry for a minimum of 24 hr., and
- remove the plastic mold from the capped core.

5.3 Place a prepared specimen in the cutting template mold and use a masonry saw to cut it along the flat edge of the mold as shown in Figure 2.

5.3.1 The cut across the specimen should be approximately 1/2 in. (13 mm) deep.

5.4 Place the high-density polyethylene molds into the mounting tray and fit specimens into each one.

5.4.1 For cores less than 5.9 in. (150 mm) in diameter, place plastic spacers around the cores to secure them.

5.5 Fasten the mounting trays into the empty water bath.

5.6 Start the software supplied with the machine, and enter the specimen or core information into the computer. Test temperature should be 122 ± 2°F (50 ± 1°C) for all specimens.

5.7 Fill the water bath, monitoring the temperature of the water on the computer screen.

5.8 Once the water has reached the desired temperature, saturate the combined test specimens in the water for an additional 30 min.

5.9 Start the test using the software supplied with the machine. The testing device automatically stops the test when the device has applied the number of desired passes or when the maximum allowable rut depth has been reached.

5.10 Open the report program, select the Midpoint Data Set option, and record the rut depth at every 5,000 passes and number of cycles at failure.

**Note 6**—The Midpoint Data Set option reports rut depth based on the average deformation at the three center points as shown in Figure 1.

## 6. REPORT

6.1 Report the following for each test:

- specimen type;
- rut depth at 5,000; 10,000; 15,000; and 20,000 passes (when available);
- rut depth at failure; and
- number of passes to failure.

## 7. REPORT FORMS

7.1 Hamburg Wheel-Tracking Test

## 8. ARCHIVED VERSIONS

8.1 Archived versions are available.

**Test Procedure for**

# CANTABRO LOSS

**TxDOT Designation: Tex-245-F**

***Effective Date: July 2019***

## 1. SCOPE

1.1 This test method determines the abrasion loss of compacted hot-mix asphalt (HMA) specimens.

1.2 This test method measures the breakdown of compacted specimens utilizing the Los Angeles Abrasion machine. The percent of weight loss (Cantabro loss) is an indication of PFC, LRA, and hot-mix cold-laid durability and relates to the quantity and quality of the asphalt binder. This procedure can be performed on other HMA mixtures for informational purposes.

1.3 The values given in parentheses (if provided) are not standard and may not be exact mathematical conversions. Use each system of units separately. Combining values from the two systems may result in nonconformance with the standard.

## 2. APPARATUS

2.1 *Apparatus used in Tex-206-F.*

2.2 *Apparatus used in Tex-241-F.*

2.3 *Apparatus used in Tex-207-F.*

2.4 *Apparatus used in Tex-227-F.*

2.5 *Apparatus used in Tex-410-A.*

2.6 *Temperature Chamber or Heating Oven,* capable of maintaining 77 ± 2°F (25 ± 1°C).

## 3. SAFETY CONSIDERATIONS

3.1 Use ear protection.

3.2 Use a cartridge respirator or disposable paper mask to prevent inhalation of particulate.

## 4. SPECIMENS

4.1 Prepare two specimens in accordance with Tex-241-F. Specimen diameter must be 5.9 in. (150 mm), and height must be 4.5 ± 0.2 in. (115 ± 5 mm).

**Note 1**—For hot-mix cold-laid and LRA material, prepare three specimens in accordance with Tex-206-F. Specimen diameter must be 4 in. (101.6 mm), and height must be 2.0 ± 0.06 in. (50.8 ± 1.5 mm).

4.1.1 For PFC mixtures, mold test specimens to 50 gyrations (Ndesign). There is not a specific density requirement for PFC mixtures.

**Note 2** —Select the mixture weight for the molded PFC specimen based on the weights used in the mix design.

4.1.2 For other HMA mixtures, density of test specimens must be 93 ± 1%.

**Note 3**—Mixture weights for specimens that achieve the density requirement typically vary between 4,200 and 4,500 g.

**Note 4**—These mixtures are normally tested for informational purposes only.

4.1.3 For hot-mix cold-laid and LRA mixtures, mold samples to density in accordance with the specification.

## 5. PROCEDURE

5.1 Mold specimens in accordance with Section 4.

5.2 Cool molded specimens to room temperature and weigh. Record and designate the weight as *A* under Section 6.

5.3 Calculate the density of the specimens in accordance with Tex-207-F and Tex-227-F.

5.4 Discard specimens not meeting the 93 ± 1% density requirement and mold new specimens in accordance with Section 4.

**Note 5**—This density requirement does not pertain to PFC, LRA, or hot-mix cold-laid material.

5.5 Allow the specimens to stand at room temperature (77 ± 3˚F) for a minimum of 24 hr. before testing.

5.6 Place the specimens in the temperature chamber or oven long enough to ensure a consistent temperature of 77 ± 2°F (25 ± 1°C) throughout the specimen before testing.

5.7 Test laboratory-molded specimens within three days of molding.

5.8 Place the test specimen in the Los Angeles testing machine.

**Note 6**—Do not include the steel balls.

5.9 Rotate the Los Angeles machine at a speed of 30–33 rpm for 300 revolutions.

5.10 After 300 revolutions, discard the loose material broken off the test specimen.

5.11 Without including any of the discarded material, weigh the test specimen. Record and designate this weight as *B* under Section 5.

## 6. CALCULATIONS

6.1 Calculate the Cantabro Loss using the following formula:

$$CL = \frac{A - B}{A} x100$$

Where:
*CL* = Cantabro Loss, %
*A* = Initial weight of test specimen
*B* = Final weight of test specimen

## 7. REPORT

7.1 Report the following for each specimen:

- initial weight,
- final weight, and
- percent loss.

7.2 Report the average percent loss of the tested specimens to the nearest tenth.

## 8. REPORT FORMS

8.1 Cantabro

## 9. ARCHIVED VERSIONS

9.1 Archived versions are available.

# Tex-245-F, Cantabro Loss

**Calculation**

$$CL = \frac{A - B}{A} \times 100$$

**Where:**

CL = Cantabro Loss
A = Initial weight of test specimen
B = Final weight of test specimen

**Test Procedure for**

# OBTAINING AND TRIMMING CORES OF BITUMINOUS MIXTURES

**TxDOT Designation: Tex-251-F**

***Effective Date: November 2019***

## 1. SCOPE

1.1 Use Part I of this test method to obtain cores drilled from compacted bituminous pavements.

1.2 Use Part II of this test method to trim cores to prepare specimens for laboratory testing.

1.3 The values given in parentheses (if provided) are not standard and may not be exact mathematical conversions. Use each system of units separately. Combining values from the two systems may result in nonconformance with the standard.

# PART I—OBTAINING CORES OF BITUMINOUS MIXTURES

## 2. SCOPE

2.1 Use this procedure to obtain cores drilled from bituminous mixtures.

## 3. APPARATUS

3.1 *Core Bit*, of hardened steel or other suitable material, diamond-impregnated in cutting edge, of desired diameter.

3.2 *Core Drill*, motor-driven with enough horsepower to obtain full-depth cylindrical cores.

3.3 *Cooling Agent,* such as water, ice, or dry ice.

3.4 *Retrieval Device,* for removing cores, such as a steel rod, thin wire loop, or mallet.

3.5 *Security Bags*, Department-provided.

3.6 *Repair material,* for filling in core holes.

## 4. PROCEDURE

4.1 Ensure the pavement surface is sufficiently cool to prevent damage to the core.

**Note 1**—A maximum surface temperature of 160°F is recommended to prevent damage to the core.

**Note 2**—A cooling agent can be used to decrease the surface temperature before coring.

4.2 Place the core bit directly above the desired sampling location.

4.3 Provide water to aid in the removal of cuttings and to minimize the generation of heat caused by friction between the core bit and the pavement.

4.4 Maintain the core bit perpendicular to the pavement while applying constant downward pressure on the core bit until the desired depth is achieved.

**Note 3**—Failure to apply constant pressure or applying excessive pressure may cause the core bit to bind or the core to distort.

4.5 Use retrieval device to take the pavement core out of the core bit. Avoid distorting, bending, or cracking the cores.

4.6 Place cores in security bags and store in a cool place.

4.7 Remove water from core hole.

4.8 Repair the resulting core hole by filling with approved patch material or hot mix and compacting until top is flush with the pavement surface.

# PART II—TRIMMING CORES OF BITUMINOUS MIXTURES

## 5. SCOPE

5.1 Use this procedure to trim cores to prepare specimens for laboratory testing.

## 6. APPARATUS

6.1 *Masonry Saw,* for trimming ends of cores, with diamond or silicon-carbide cutting edge and capable of cutting cores without introducing cracks or dislodging aggregate particles.

6.2 *Marker*, such as paint pen or permanent marker.

6.3 *Measuring Device,* such as a ruler, calipers, or measuring tape.

## 7. PROCEDURE

7.1 For cores with uneven surfaces, follow the instructions in Sections 7.3–7.12.

7.2 For cores with level surfaces, measure the untrimmed core height to the nearest 1/16 in. and proceed to Section 7.8.

**Note 4**—When measuring the untrimmed core height, do not include foreign matter. Foreign matter is material extraneous to the pavement layer being tested; examples

include another paving layer, such as hot mix, surface treatment, subgrade, or base material.

7.3 On the top surface of the core, mark the apparent thinnest location with a marker.

7.4 Make three more marks around the perimeter of the core at 90, 180, and 270 degrees from the mark made in Section 7.3.

7.5 Measure the height of the core at the marked locations. Refer to Note 4.

7.6 Take additional measurements around the core if the measurements taken in Section 7.5 vary by more than 1/4 in. Mark the location of the additional measurements.

7.7 Average the measurements and record the untrimmed core height to the nearest 1/16 in.

7.8 Remove visually evident foreign matter and tack material from the core with a saw or by any other satisfactory means.

7.9 Ensure that the sample size and number of samples conform to the requirements of Tex-222-F.

7.10 Trim the bottom or top of the core only when necessary. Remove any foreign matter and tack material to ensure a level and smooth surface for testing.

7.11 Trim the minimum amount of core necessary, but no more than 1/2 in.

**Note 5**—Do not trim the core if the surface is level and there is not foreign matter or tack material bonded to the surface of the core.

7.12 Measure and record the trimmed core height to the nearest 1/16 in.

**Test Procedure for**

# SAMPLING BITUMINOUS MATERIALS, PRE-MOLDED JOINT FILLERS, AND JOINT SEALERS

**TxDOT Designation: Tex-500-C**

***Effective Date: May 2020***

## 1. SCOPE

1.1 These procedures apply to the sampling of liquid, semi-solid, or solid bituminous materials at the point of manufacture, storage, and delivery. Sampling can be from tanks, containers, bulk storage, tank cars, distributors, drums, or cakes, for the following purposes:

- preliminary investigation of material source,
- quality tests of bituminous materials at point of manufacture, and
- inspection of materials at the site of the project.

1.2 The test method is in several parts, containing procedures for the following:

- Part I—Sampling from Storage Tanks;
- Part II—Sampling from Pipelines;
- Part III—Sampling from Tank Cars, Trucks, or Distributors;
- Part IV—Sampling from In-line Blended Materials;
- Part V—Sampling from Drums, Packages, or Cakes;
- Part VI—Sampling Pre-Molded Expansion Joint Filler and Asphalt Plank;
- Part VII—Sampling Joint Sealers;
- Part VIII—Sampling Bituminous Marker Adhesive;
- Part IX—Recording, Labeling, Packaging, Storing, and Shipping of Samples.

1.3 The values given in parentheses (if provided) are not standard and may not be exact mathematical conversions. Use each system of units separately. Combining values from the two systems may result in nonconformance with the standard.

1.4 This test procedure does not claim to cover all the required measures to address health and safety concerns. It is the responsibility of the sampler to take all the necessary precautions and follow any applicable health and safety procedures.

## 2. GENERAL PROCEDURES

2.1 Except as described in specific sections below, one can perform sampling in accordance with AASHTO R66 - "Standard Practice for Sampling Asphalt Materials."

2.2 Use appropriate safety precautions when sampling or handling liquid or semisolid materials.

2.2.1 Use, as a minimum, the following Personal Protective Equipment (PPE):

- gloves;
- glasses, goggles, or face shield;
- long sleeve shirt;
- long pants; and
- shoes that cover the entire foot.

2.2.2 For sampling liquid asphalts, open sample valves with caution; as asphalt materials in all types of containers may be under pressure.

2.3 Use appropriate containers with a capacity corresponding to the required amount of material for sampling:

- liquid asphalt, other than emulsions and cutbacks: double-seal friction-top metal cans, clean and dust-free, dry, with a minimum capacity of 1 qt. (1 L);
- emulsified asphalt: wide-mouth plastic jars, clean and dust-free, dry, with a minimum capacity of 1 qt. (1 L);
- cutback asphalt: double-seal friction-top or screw-top metal cans, clean and dust-free, dry, with a minimum capacity of 1 qt. (1 L);
- solid or semisolid bituminous materials from drums, packages, or cakes: friction-lid bucket or can, clean and dust-free, dry, with a minimum capacity of 1 gal. (4 L);
- pre-molded expansion joint filler and asphalt plank: box or light piece of plywood, clean and dust-free, dry, with a minimum base dimension of 12 x 12 in. (300 x 300 mm);
- joint sealers: friction-lid bucket or can, clean and dust-free, dry, with a minimum capacity of 1 gal. (4 L); or
- bituminous marker adhesive: sample boxes, clean and dust-free, dry, with a minimum capacity of 12 to 15 lb. (5.5 to 7 kg.).

2.4 Collect representative samples.

2.4.1 When sampling liquid asphalts other than emulsions, fill the container to approximately 95% capacity; leaving a small amount of space for stirring the sample before the tests. When sampling emulsions, completely fill the container to avoid any air entrapment in the sample.

2.4.2 Eliminate any possible source of contamination including but not limited to:

- remaining residual of other types and grades of asphalt in the tank or line being sampled;
- presence of cleaning agents in the tank, line, or nuzzle bar being sampled;
- remaining residual of other types and grades of asphalt, cleaning agents, or any foreign matter on the sampling device; or
- dust, moisture, fuel, or any foreign matter in the sampling container.

2.4.3 Avoid any alteration of the material being sampled by filtering or screening.

# PART I—SAMPLING FROM STORAGE TANKS

## 3. SCOPE

3.1 Refineries and asphalt producers are required to store semi-solid asphalt, liquid asphalt, and emulsified asphalt in metal tanks provided with a number of drain cocks, depending on the capacity of the tank, located on the side at definite distances from the top.

3.2 Use the following procedure when sampling liquid bituminous materials from these storage tanks.

## 4. PROCEDURE

4.1 The number of samples collected per bulk storage tank mainly depends upon the capacity of the tank.

4.1.1 Take two samples, from 1/3 and 2/3 of tank depth, for tanks of up to 400,000 gal. (1,500,000 L) capacity.

4.1.2 Take three samples, from top, middle, and bottom of the tank, for tanks of more than 400,000 gal. (1,500,000 L) capacity.

4.1.3 If the tank contains a mechanism such as Mechanical Agitators or Circulators, to ensure uniformity of the material contained within it and observation or testing samples from various levels within the tank verifies the mechanism, a single sample is satisfactory for test purposes.

4.1.4 When collecting samples for submission to the Department, samples from multiple elevations on the tank are not required except by the Engineer's request. In this case, Department representatives may randomly choose at least one valve location for sampling.

4.2 Wearing the required safety equipment, collect the sample using either Valve or Thief or Dip Sampler method.

4.2.1 **Valve Method:** Open the appropriate valve or drain cock on the tank and allow enough material (a minimum of 1 gal or 4 L) to flow into a waste container to ensure a representative sample. Then, fill the sample container from the valve or drain cock. Figure 1 shows common types of valves used for sampling liquid asphalt from tanks.

4.2.2 **Thief or Dip Sampler Method:** Due to safety concerns, it is not recommended to take samples by Thief or Dip method from the top of the tank, unless no other method of sampling is available. If valves or drain cocks are not available, take samples by lowering a Thief Sampler or a weighted container (Dip method) into the tank.

4.2.2.1 **Thief Method:** This type of sampler contains a cylindrical tube with no top closure and a closing valve at the bottom. The sampler should be lowered to the tank with the bottom valve open. When the sampler reached to the desired depth, the bottom valve should be closed. Then the sample is gently pulled out and transferred to a container. Figure 2 shows an acceptable type of Thief sampler.

4.2.2.2 **Dip Method:** The container should be fitted with a stopper, removable by a string or wire when the container is at the proper depth in the tank. The sample is gently pulled out and transferred to a new container. Figure 3 shows a common type of Dip sampler.

4.3 When sampling liquid asphalts other than emulsions, fill the container to approximately 95% capacity; leaving a small amount of space for stirring the sample before the tests. When sampling emulsions, completely fill the container to avoid any air entrapment in the sample.

4.3.1 Use appropriate containers with a capacity corresponding to the required amount of material for sampling:

- liquid asphalt, other than emulsions and cutbacks: double-seal friction-top metal cans, clean and dust-free, dry, with a minimum capacity of 1 qt. (1 L);
- emulsified asphalt: wide-mouth plastic jars, clean and dust-free, dry, with a minimum capacity of 1 qt. (1 L);
- cutback asphalt: double-seal friction-top or screw-top metal cans, clean and dust-free, dry, with a minimum capacity of 1 qt. (1 L);
- solid or semisolid bituminous materials from drums, packages, or cakes: friction-lid bucket or can, clean and dust-free, dry, with a minimum capacity of 1 gal. (4 L).

4.4 Seal the sample container. In the case of using friction-top metal cans, it is recommended to secure the lid using appropriate metal lid clips.

4.5 Proceed to Part IX—Recording, Labeling, Packaging, Storing, and Shipping of Samples within this test procedure.

**Figure 1**
**Examples of Valves Commonly Used for Sampling Liquid Asphalt from Tanks**

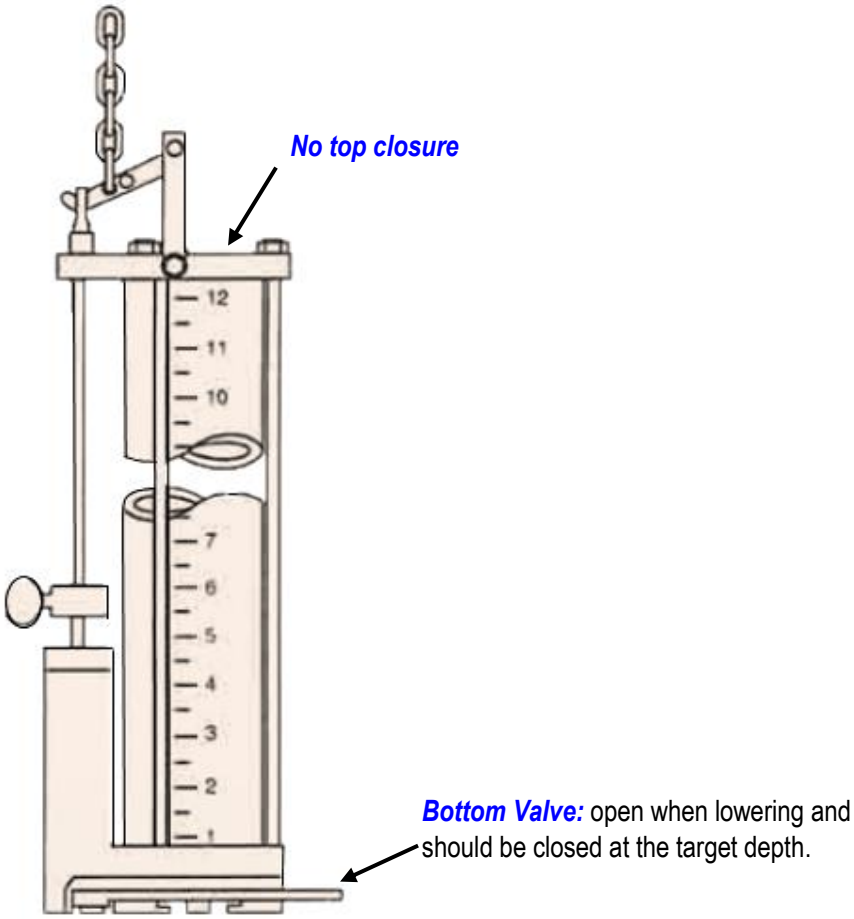


**Figure 2**
**Schematics of an Acceptable Thief Sampler Device Used for Sampling Liquid Aspahlt**

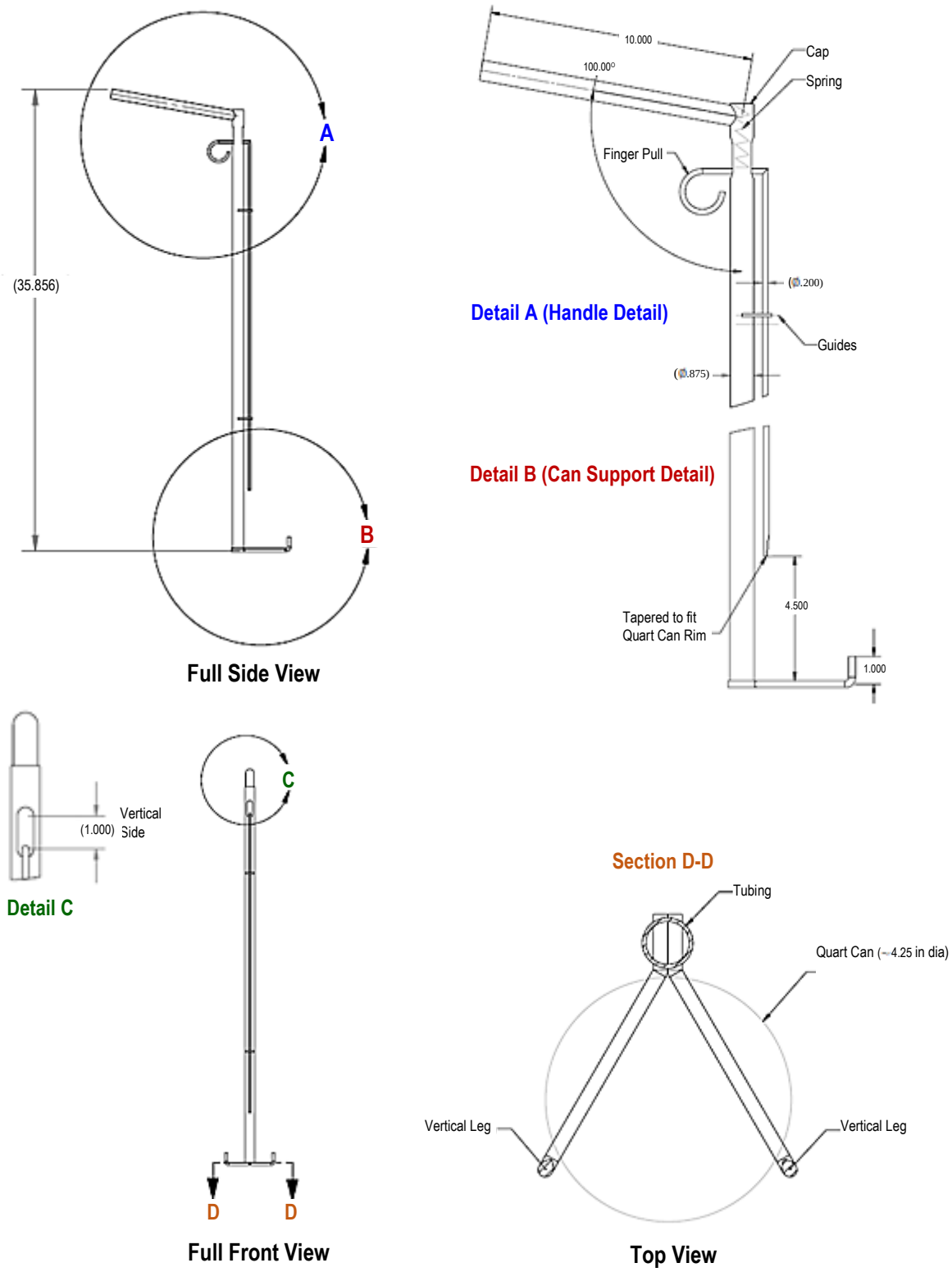


**Figure 3**
**Schematics of a Common Dip Sampler Device Used for Sampling Liquid Asphalt**

# PART II—SAMPLING FROM PIPELINES

## 5. SCOPE

5.1 Samples can be taken from the pipeline when:

- loading or unloading tankers or barges;
- the pipeline is filling tank cars, distributors, or drums; or
- the asphalt line is feeding the mix plant.

5.2 Use the following procedure when sampling liquid bituminous materials from pipelines.

## 6. PROCEDURE

6.1 A sampling pipe of not more than 1/8 the diameter of the pipeline, with a drain cock used to regulate the flow through it, is required. Figure 4 shows common types of valves used for sampling liquid asphalt from pipelines. The sampling pipe should be inserted into the pipeline at a right location with its opening turned to face the flow of the liquid.

6.1.1 For a flow under pump pressure, the right location is the rising section of the line on the discharge side of the pump.

6.1.2 For a flow under gravity, the right locations are the parts of the pipeline which are completely full.

6.2 When sampling from a drain cock, open the drain cock and allow enough material (a minimum of 1 gal or 4 L) to flow into a waste container to clear the sample cock and sample line from old material.

6.2.1 Fill the sample container from the valve or drain cock.

6.2.1.1 When sampling liquid asphalts other than emulsions, fill the container to approximately 95% capacity; leaving a small amount of space for stirring the sample before the tests. When sampling emulsions, completely fill the container to avoid any air entrapment in the sample.

6.2.1.2 Use appropriate containers with a capacity corresponding to the required amount of material for sampling:

- liquid asphalt, other than emulsions and cutbacks: double-seal friction-top metal cans, clean and dust-free, dry, with a minimum capacity of 1 qt. (1 L);
- emulsified asphalt: wide-mouth plastic jars, clean and dust-free, dry, with a minimum capacity of 1 qt. (1 L);
- cutback asphalt: double-seal friction-top or screw-top metal cans, clean and dust-free, dry, with a minimum capacity of 1 qt. (1 L).

6.2.2 Tightly close and seal the sample container. In the case of using friction-top metal cans, it is recommended to secure the lid using appropriate metal lid clips.

6.2.3 Proceed to Part IX—Recording, Labeling, Packaging, Storing, and Shipping of Samples within this test procedure.

6.3 When a large quantity of liquid asphalt is being transferred through pipeline (e.g., loading or unloading tankers or barges), multiple number of 1-gal (4-L) samples should be taken to obtain an overall representative sample.

6.3.1 The minimum number of required samples depends upon the amount of the material being transferred. For instance, for loading or unloading of tankers or barges with a capacity of

- less than 25,000 barrels (4,000 $m^3$), at least five 1-gal (4-L) samples is required, or
- more than 25,000 barrels (4,000 $m^3$), at least ten 1-gal (4-L) samples is required.

6.3.2 Sampling should be uniformly distributed during the loading or unloading process.

6.3.3 To obtain a representative sample, all the collected individual samples should be thoroughly mixed in a larger container (sample receiver) at the end of loading or unloading process. Then, a 1-gal (4-L) representative sample should be taken from the mixed material in the sample receiver.

6.3.4 Tightly close and seal the sample container. In the case of using friction-top metal cans, it is recommended to secure the lid using appropriate metal lid clips.

6.3.5 Proceed to Part IX—Recording, Labeling, Packaging, Storing, and Shipping of Samples within this test procedure.

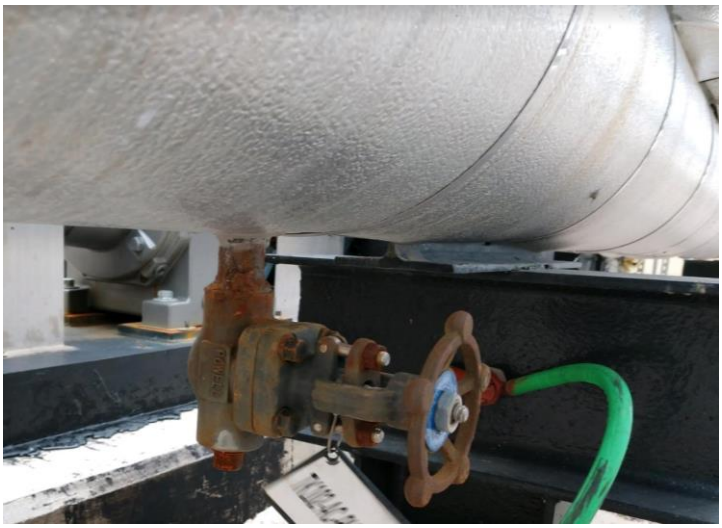

**Figure 4**
**Examples of Valves Commonly Used for Sampling Liquid Asphalt from Pipelines**

# PART III—SAMPLING FROM TANK CARS, TRUCKS, OR DISTRIBUTORS

## 7. SCOPE

7.1 Use this procedure when sampling liquid or semi-solid bituminous materials from tank cars, trucks, or distributors.

## 8. PROCEDURE

8.1 If possible or if there is a concern regarding the quality of the material delivered, carefully inspect the material for the presence of foam, sediment, or free water on top or bottom of the car or truck. Make notation of such observations.

8.2 When sampling semi-solid materials, heat the materials to fluidity. (Sample all liquid materials without heating, if possible.)

8.3 When sampling from distributors, circulate and mix the material thoroughly with the pump.

8.4 Wearing the required safety equipment, collect the sample using sampling port / valve designed on these delivery vehicles or distributor. Sampling valve should be installed at least 1 ft (305 mm) away from the shell of the tank and should be also labeled as "sampling valve." If only one sample is needed, it is recommended to obtain the sample halfway through the unloading process.

8.5 When sampling port or valve does not exist, a representative sample can be obtained by using Sampling Pipe Fitting or Thief or Dip Sampler method. In addition, samples from a distributor can also be obtained directly from the spray bar.

8.5.1 Sampling Pipe Fitting: sampling can also be done by mounting a detachable or permanent sampling pipe fitting in the discharge line, between the unloading pipe and hose, and close to the end. Figure 5 demonstrates schematics of a detachable sampling pipe fitting device. When unloading tanker trucks, using this device slowly, collect a sample from the middle third of the unloading process.

8.5.2 Thief or Dip Sampler Method: Obtain a sample from the top of the truck by lowering the sampling device through the top hatch, similar to what was described in Part I. Due to safety concerns, it is not recommended to take samples by Thief or Dip method from the top of the vehicle, unless no other method of sampling is available.

8.5.3 Sampling from the Spray Bar: when sampling from a distributor nozzle, allow at least one full shot after the start of the workday, or after cleaning the spray bar, to insure that any cleaning agent has been cleared from the spray bar.

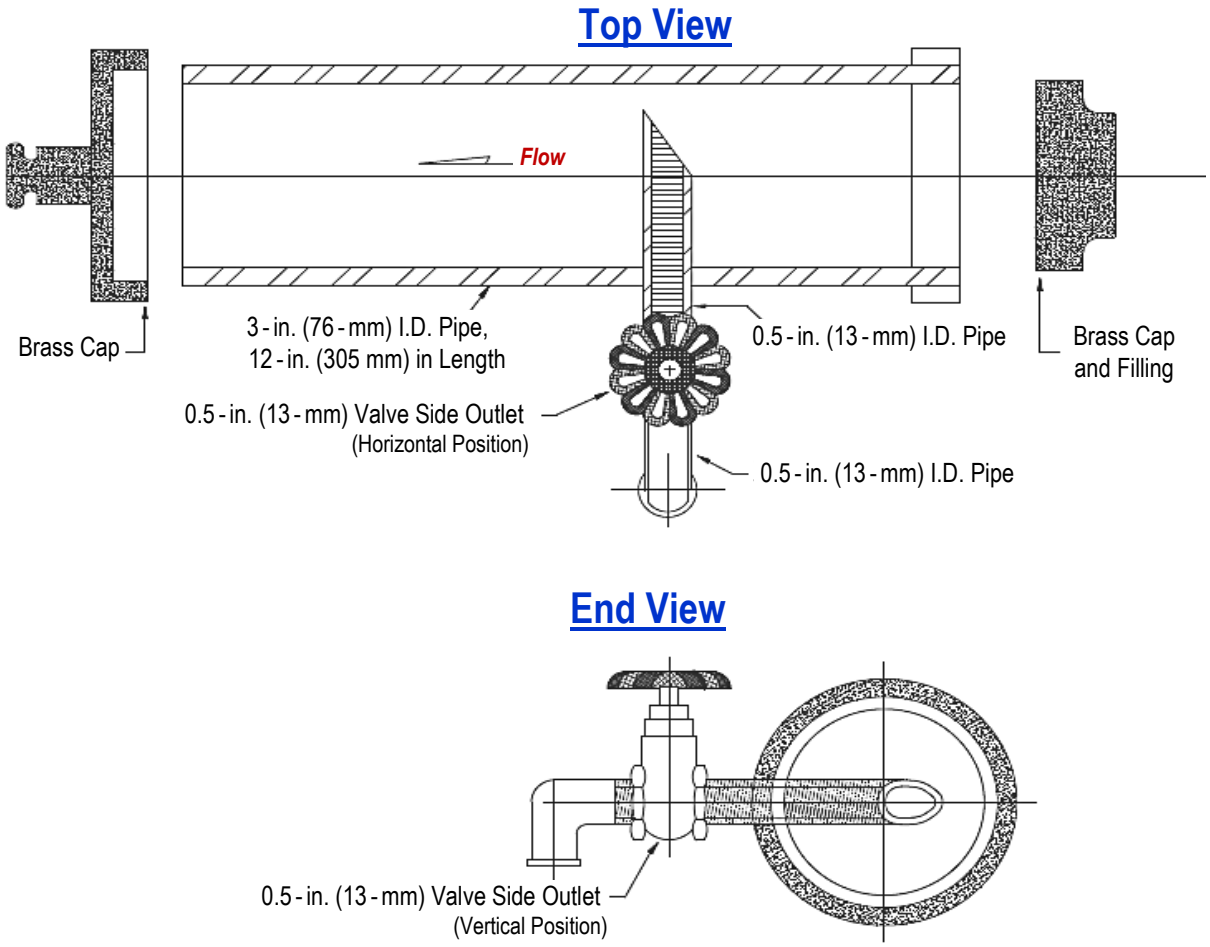


**Figure 5**
**Schematics of a Typical Detachable Sampling Pipe Fitting Device**

8.6 When obtaining a sample from the sampling port or Sampling Pipe Fitting (loading or unloading line), open the appropriate valve or drain cock and allow enough material (a minimum of 1 gal or 4 L) to flow into a waste container to ensure removal of old material and collection of a representative sample.

8.7 Pour the material into a clean container.

8.7.1 When sampling liquid asphalts other than emulsions, fill the container to approximately 95% capacity; leaving a small amount of space for stirring the sample before the tests. When sampling emulsions, completely fill the container to avoid any air entrapment in the sample.

8.7.2 Use appropriate containers with a capacity corresponding to the required amount of material for sampling:

- liquid asphalt, other than emulsions and cutbacks: double-seal friction-top metal cans, clean and dust-free, dry, with a minimum capacity of 1 qt. (1 L);
- emulsified asphalt: wide-mouth plastic jars, clean and dust-free, dry, with a minimum capacity of 1 qt. (1 L);
- cutback asphalt: double-seal friction-top or screw-top metal cans, clean and dust-free, dry, with a minimum capacity of 1 qt. (1 L).

8.8 Tightly close and seal the sample container. In the case of using friction-top metal cans, it is recommended to secure the lid using appropriate metal lid clips.

8.9 Proceed to Part IX—Recording, Labeling, Packaging, Storing, and Shipping of Samples within this test procedure.

# PART IV—SAMPLING FROM IN-LINE BLENDED MATERIALS

## 9. SCOPE

9.1 Use this procedure when the material supplier is blending finished grades of asphalt material directly into trucks using an automatic blending system.

9.2 The producer should assign a batch number to each individual grade of asphalt produced through an automatic blender. The producer must change this number each time either of the blending stocks or formulation is changed.

## 10. PROCEDURE

10.1 Auto-sampling devices that collect samples, during or throughout the loading process, may be used as approved by the Engineer or as approved for use in the supplier's quality plan. Figure 6 shows an auto-sampler device installed towards the end of a loading pipeline. This type of auto-sampler collects a large number of small samples at constant intervals using compressed air force. Compressed air forces a plunger into the transfer line to capture a fixed volume of material and then the plunger will be pulled back to a position which allows the sample to drop by gravity into the sampling container.

10.2 If the auto-sampler device is not available, obtain the sample from a trial blend, the first truck of each batch using the procedure described in Part III, or from the loading pipeline using the procedure described in Part II.

10.3 When sampling liquid asphalts other than emulsions, fill the container to approximately 95% capacity; leaving a small amount of space for stirring the sample before the tests.

10.3.1 Use appropriate containers with a capacity corresponding to the required amount of material for sampling**:**

- liquid asphalt, other than emulsions and cutbacks: double-seal friction-top metal cans, clean and dust-free, dry, with a minimum capacity of 1 qt. (1 L).

10.4 Tightly close and seal the sample container. In the case of using friction-top metal cans, it is recommended to secure the lid using appropriate metal lid clips.

10.5 Proceed to Part IX—Recording, Labeling, Packaging, Storing, and Shipping of Samples within this test procedure.

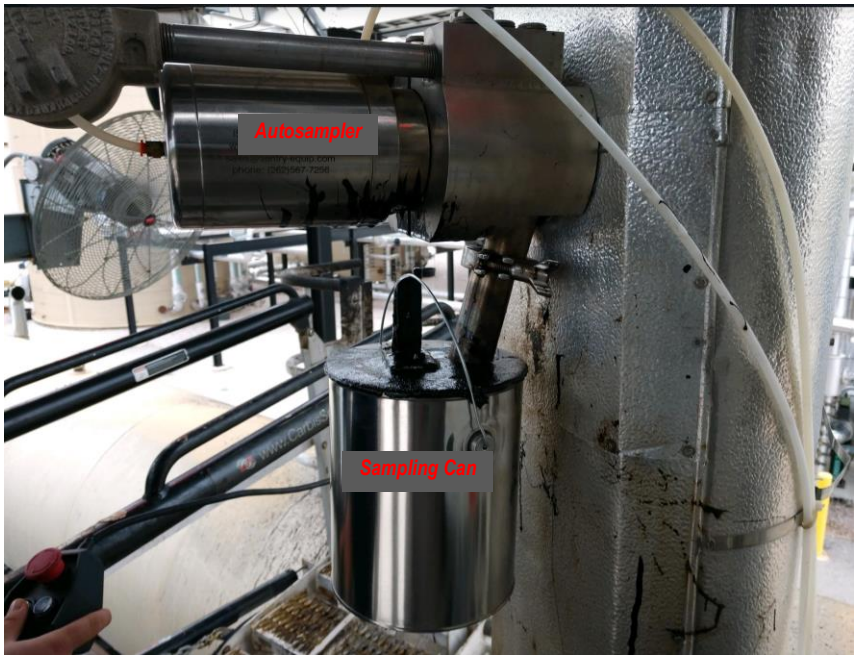


**Figure 6**
**An Autosampler Device Installed towards the End of a Loading Pipeline**

## PART V—SAMPLING FROM DRUMS, PACKAGES, OR CAKES

### 11. SCOPE

11.1 Use this procedure when sampling solid or semisolid bituminous materials from drums, packages, or cakes.

### 12. PROCEDURE

12.1 Collect the number of samples requested by the Engineer.

12.1.1 If sampling the lot of material from a single batch of the producer, select one unit at random for sampling.

12.1.2 If not sampling the lot of material from a single batch, or if a singular sample from the lot fails to meet specifications, select a number of units equal to the cube root of the total number of units in the lot, rounding up to the next whole number. For instance, take four samples for lots from 28 units up to 64 (4x4x4) units, and take five samples from lots of 65 and up to 125 (5x5x5) units. Table 1 summaries the number of samples that need to be selected for different numbers of units.

**Table 1**
**Recommended Number of Samples to be Selected**

| *Total Number of Units* | *Number of Samples Need to be Selected* |
|---|---|
| **2 to 8** | 2 |
| **9 to 27** | 3 |
| **28 to 64** | 4 |
| **65 to 125** | 5 |
| **126 to 216** | 6 |
| **217 to 343** | 7 |
| **344 to 512** | 8 |

12.2 To collect a representative composite sample, obtain samples of material, each individually

- have a mass of at least 1/4 lb. (100 g), and
- from locations at least 3 in. (76 mm) below the surface and 3 in. (76 mm) from the side of the container or from the middle of the cake.

12.2.1 Fill a 1 gal (4 L) friction-lid can or bucket to almost 95% of its capacity as the final sample.

12.2.2 Melt and thoroughly mix materials from the same batch to form one composite sample. Test materials not from the same batch separately. (Even when more than one batch is present in a particular lot, test the individual batches as composite samples if clearly identified.)

12.2.3 Tightly close and seal the sample container. In the case of using friction-top metal cans, it is recommended to secure the lid using appropriate metal lid clips.

12.3 If the containers of material are not unreasonably large for shipment, use an entire container as a sample.

12.4 Record sample details, label the sample, generate a Form 202 (Identification of Material Samples), and ship the sample to MTD.

# PART VI—SAMPLING PRE-MOLDED EXPANSION JOINT FILLER AND ASPHALT PLANK

## 13. SCOPE

13.1 Use this procedure when sampling pre-molded materials, such as joint filler and asphalt plank.

## 14. PROCEDURE

14.1 Take a sample at least 12 x 12 in. (30 x 30 cm) for each thickness of material, for each type, and for each producer.

14.2 When material is in irregular shapes or sizes, use a piece of at least 1 ft.$^2$ (900 cm$^2$) of each thickness, type, and producer as the sample.

**Note 1**—Do not use pieces less than 4 in. (100 cm), in any dimension, as samples.

14.3 Enclose the sample in a box or tie it securely to a light piece of board or plywood and wrap it to avoid damage during shipment.

14.4 Record sample details, label the sample, generate a Form 202 (Identification of Material Samples), and ship the sample to MTD.

# PART VII—SAMPLING JOINT SEALERS

## 15. SCOPE

15.1 Use this procedure for all types of joint sealers, including hot-poured rubber, asphalt-rubber crack sealant, single component synthetic polymers, and two-component synthetic polymers. The manufacturer usually packages these materials in individual containers.

## 16. PROCEDURE

16.1 Collect the number of samples requested by the Engineer. It is recommended to submit one sample for each lot or batch number (numbered by manufacturer) of sealer in the shipment.

16.2 Avoid opening individual packages whenever possible. If the packages are not unreasonably large for shipment, use an entire package as the sample. For instance, when sampling two-component sealers, if the components are packaged together, as a can carrying a 'Piggyback' container inside, take one unit for the sample.

16.3 Sample large containers in accordance with Part V with the following considerations.

16.3.1 Hot Poured Rubber Asphalt Joint Sealer and Rubber Asphalt Crack Sealing Compound:

- Obtain one container from each batch or lot;
- When several batches make up a shipment, combine them to make one lot; and
- Take one sample to represent the shipment.

16.3.2 Single-Component, Ready Mixed, Cold-Applied Sealer:

- Stir thoroughly before sampling; and
- Fill one bucket per sample.

16.3.3 Two-Component Sealers:

- Stir any liquid components thoroughly;
- Pour from one can to a clean, empty container to check for settlement;
- Take one full bucket sample for any liquid components; and
- For solid or paste components, take a sample, of appropriate size, to mix with the bucket of liquid.

16.3.4 Seal new containers of any synthetic polymer materials immediately, to minimize exposure to air and to prevent premature curing.

16.4 Small samples of hot-applied material can be directly collected from the applicator, after dispensing enough material to ensure any leftover product in the hose or applicator has been purged.

16.5 For two-component materials, include specimens of each component, packaged together, of requisite sizes for the specified mix proportions.

16.6 Include specimens of primers with samples of sealants where primers are used.

16.7 Record sample details, label the sample, generate a Form 202 (Identification of Material Samples), and ship the sample to MTD. Include the following information with the shipment:

Consignment of Sample. (EXAMPLE: Requisition and Board Control Number, contractor, and project information, or warehouse name and location);

Mixing proportions by weight or volume, as appropriate, for two-component materials; and

The amount of material represented by the sample for single-component material, or of each component for two-component material.

# PART VIII—SAMPLING BITUMINOUS MARKER ADHESIVE

## 17. SCOPE

17.1 Use this procedure for sampling bituminous marker adhesive.

## 18. PROCEDURE

18.1 Obtain a 12 to 15 lb. (5.5 to 7.0 kg) segment in a box from each batch or lot. (The material, which is typically solid at room temperature, will have been hot-poured into the sample box by the manufacturer.)

18.2 When a shipment contains several batches, combine to make one lot and take one sample to represent the shipment

18.3 Record sample details, label the sample, generate a Form 202 (Identification of Material Samples), and ship the sample to MTD. Include the following information with the shipment.

# PART IX—RECORDING, LABELING, PACKAGING, STORING, AND SHIPPING OF SAMPLES

## 19. SCOPE

19.1 Use this procedure for recording, labeling, packaging, storing, and shipping of samples.

## 20. MATERIALS

20.1 Label maker, compatible with 24 mm (0.94 in.) TZe tapes and is able to connect to a PC and run P-touch Editor.

**Note 2**—Examples include Brother P-touch label maker models PT-D600 or PT-P700.

20.2 TZe-S251 Extra Strength Adhesive Tape, temperature resistant from -112°F to 356°F (-80°C to 180°C ) and rated for rough, textured, and painted surfaces.

20.3 Shipping container or box, appropriate for shipping samples.

20.4 Labeling Marker, such as a Sharpie, magic marker, or felt tip pen.

## 21. PROCEDURE

21.1 After acquiring the sample in the appropriate sample container, attach the identifying tag or mark the sample container with the name of producer, producer facility location, type and grade of material, district, date sampled, and project information including highway and CSJ.

21.2 If the samples are shipped to Materials and Tests Division (MTD) for testing, proceed to Section 21.3. If the sample is being stored, proceed to Section 21.4.

**Note 3**— Collect split samples for all asphalt binder materials sent to MTD for testing.

**Note 4**— Refer to the Asphalt Binder Inspection and Sampling Guidance document for more information regarding asphalt binder samples.

21.3 Log sample into SiteManager and generate a SiteManager ID. Populate the fields in SiteManager that are needed to completely identify the sample.

21.3.1 Generate a Form 202 in SiteManager.

**Note 5**— Producers may manually fill the Form 202 (Identification of Material Samples).

21.3.2 Copy and paste SiteManager ID into printer software and ensure bar code protocol "Code 128" is selected.

21.3.3 For asphalt samples, print three copies of the bar code and attach two bar codes to the sides of the sample container in the vertical direction.

**Note 6**—For samples composed of multiple samples, such as two part joint sealants, print and place as many bar codes as needed to attach two bar codes for each part of the products being tested, and print one additional bar code.

21.3.4 Print Form 202.

21.3.5 Place the samples in shipping container or box along with a copy of the Form 202 for each sample. Attach the additional bar code to the outside of the shipping box.

21.3.5.1 If multiple samples are shipped in the same shipping box, attach the corresponding bar code for each sample to the outside of the shipping box.

21.3.5.2 Do not include any other materials (e.g. aggregates, HMA, etc.) in the same shipping box used for shipping asphalt samples.

21.3.5.3 Use wadded paper (e.g., newspapers) as packing material. Avoid materials such as shredded paper, bubble wrap, and Styrofoam pellets.

21.3.6 Obtain the tracking number and add it to the sample in SiteManager.

21.3.7 Ship the samples to MTD.

21.4 For samples being stored, transport the samples to the designated storage area (e.g. district laboratory, area office, or other approved storage area.)

21.5 In SiteManager, associate the sample with the project information and document the number of transports received for each day.

21.6 Store the samples of hot-applied asphalt binders and cutback asphalts in the designated area for a minimum of one yr. The minimum storage time for emulsified asphalts is two mo. Organize the samples by sample type, date, and project.

**Note 7**—MTD may later request these samples for additional testing.

## Test Procedure for

# EFFECT OF WATER ON BITUMINOUS PAVING MIXTURES

## TxDOT Designation: Tex-530-C

***Effective Date: August 2008***

## 1. SCOPE

1.1 Use this procedure to evaluate the susceptibility of hot mix-cold laid (HMCL) or hot mix-hot laid (HMHL) paving mixtures to stripping of the asphalt from the aggregate by water. Also use the procedure to evaluate the effectiveness of anti-stripping additives in a paving mixture.

1.2 The values given in parentheses (if provided) are not standard and may not be exact mathematical conversions. Use each system of units separately. Combining values from the two systems may result in nonconformance with the standard.

## 2. APPARATUS

2.1 *Mixing pan,* round, approximately 20 mm (8 in.) in diameter and 8 mm (3 in.) depth.

2.2 *Mixing trowel.*

2.3 *Mercury thermometer,* capable of measuring the temperature specified in the test procedure.

2.4 *Metal can,* e.g., small ointment tin.

2.5 *Spatula,* approximately 10-mm (4-in.) metal blade.

2.6 *Balance,* Class G2 in accordance with Tex-901-K, with minimum capacity of 2000 g.

2.7 *Oven,* capable of maintaining 150°C (300°F).

2.8 *Hot oil bath,* controllable at 177°C (350°F) and sized to allow a 2000-mL (68-oz.) beaker supported at a minimum of 0.6 mm (0.25 in.) from the bottom when submerged to 2/3 of its depth.

2.9 *Beaker,* 2000 mL (68 oz.), preferably stainless steel.

2.10 *Stirring rod,* capable of withstanding the temperature specified in the test procedure.

## 3. MATERIALS

3.1 *White paper towels.*

3.2 *Distilled or deionized water.*

3.3 *USP mineral oil for bath,* minimum flash point of 215°C (420°F).

## 4. PROCEDURES

4.1 *Evaluating Commercial Anti-Strip Agents:*

4.1.1 Pre-heat the asphaltic material to the minimum temperature shown in Tex-205-F, Table 1.

4.1.2 Weigh an amount of asphaltic material and anti-strip agent into a metal can, to yield approximately 100 g of treated asphaltic material.

4.1.3 Immediately mix the two materials by stirring with a small spatula for a minimum of 2 min.

4.1.4 Express the concentration of anti-strip agent as a percentage of the treated asphaltic material.

4.2 *Lime or Lime Slurry:*

4.2.1 Mix the lime well with the aggregate.

4.2.2 If using a slurry, dry the lime/aggregate mixture at the temperature shown for mixing in Tex-205-F, Table 1.

4.2.3 Express the lime concentration as a percentage of the aggregate.

4.3 *Preparing and Mixing Sample:*

4.3.1 Prepare approximately 1000 g of the mix using the appropriate asphaltic material and aggregate.

4.3.2 Mix in accordance with Tex-205-F, except weigh representative samples of each project together, rather than separating them into different sizes.

4.3.3 Allow the mix to cool at room temperature for 24 ± 2 hr.

4.3.4 For HMCL mixtures that contain asphalt cement and primer, prepare an asphalt-primer blend (no water), and any additional additives in the ratio anticipated during plant production.

4.3.5 Mix this asphalt/primer blend (if required) with the aggregate, as above, except that the blend and aggregate temperature must be 93 ± 3°C (200 ± 5°F).

4.4 *Curing (for HMCL Mixtures):*

4.4.1 Immediately after mixing, spread the mixture no more than one coarse aggregate deep in a flat pan.

4.4.2 Place in an 88 ± 3°C (190 ± 5°F) oven for 3 hr. ± 15 min., stirring the sample after 7.5 min.

4.4.3 Remove the sample from the oven and cool at room temperature for 2 hr. ± 15 min.

**Note 1**—If specified, the HMCL material is tested in the as-received condition. In this case, obtain and immediately test a 200 g representative sample.

4.5 *Testing:*

4.5.1 Bring the oil bath to between 163 and 177°C (325 and 350°F).

4.5.2 Obtain a 200 g representative sample of the material to be tested.

4.5.3 Fill the 2000-mL (68-oz.) beaker to approximately half capacity with distilled water and heat to boiling.

4.5.4 Add 200 g of mix to the boiling water. Distribute the mix evenly over the bottom of the beaker using a stirring rod.

4.5.5 Place the beaker in the oil bath. If the water does not return to boiling within 3 min., check the oil bath temperature and restart the test using a new sample.

4.5.6 Maintain the water at a medium boil for 10 min. ± 30 sec. and then remove from the bath.

4.5.7 Skim any asphalt from the water surface with a paper towel.

4.5.8 Decant the water from the beaker and empty the wet mix onto a white paper towel.

4.5.9 Estimate the degree of stripping present by visual examination under slight magnification.

4.5.10 Repeat Section 4.5.9 after the mixture has dried for 24 ± 2 hr.

4.5.11 Report the test results as the estimated percent of stripping after the drying period.

4.5.12 When evaluating the mixture during production, compare the production results to the results obtained from the design sample according to the specifications.

## 5. NOTES

5.1 Be careful not to get water in the oil bath, especially when it is hot. Observe the usual precautions when handling hot asphalt, aggregate, water, and oil.

5.2 Test plant mixes by this procedure beginning with the cooling or curing requirements for HMHL or HMCL mixtures, respectively.

5.3 Use a Fisher Burner as an alternative to an oil bath. A ring stand with ceramic-centered iron wire gauze must support the beaker.

5.4 Use metal beakers in the oil bath. Glass beakers may crack or break in the hot oil bath, resulting in a safety hazard.

## 6. REPORTING

6.1 Report the test results as the estimated percent of stripping after the drying period.

## 7. ARCHIVED VERSIONS

7.1 Archived versions are available.

# Special Specification 3077
# Superpave Mixtures

## 1. DESCRIPTION

Construct a hot-mix asphalt (HMA) pavement layer composed of a compacted, Superpave (SP) mixture of aggregate and asphalt binder mixed hot in a mixing plant. Payment adjustments will apply to HMA placed under this specification unless the HMA is deemed exempt in accordance with Section 3077.4.9.4., "Exempt Production."

## 2. MATERIALS

Furnish uncontaminated materials of uniform quality that meet the requirements of the plans and specifications.

Notify the Engineer of all material sources and before changing any material source or formulation. The Engineer will verify that the specification requirements are met when the Contractor makes a source or formulation change and may require a new laboratory mixture design, trial batch, or both. The Engineer may sample and test project materials at any time during the project to verify specification compliance in accordance with Item 6, "Control of Materials."

2.1. **Aggregate**. Furnish aggregates from sources that conform to the requirements shown in Table 1 and as specified in this Section. Aggregate requirements in this Section, including those shown in Table 1, may be modified or eliminated when shown on the plans. Additional aggregate requirements may be specified when shown on the plans. Provide aggregate stockpiles that meet the definitions in this Section for coarse, intermediate, or fine aggregate. Aggregate from reclaimed asphalt pavement (RAP) is not required to meet Table 1 requirements unless otherwise shown on the plans. Supply aggregates that meet the definitions in Tex-100-E for crushed gravel or crushed stone. The Engineer will designate the plant or the quarry as the sampling location. Provide samples from materials produced for the project. The Engineer will establish the Surface Aggregate Classification (SAC) and perform Los Angeles abrasion, magnesium sulfate soundness, and Micro-Deval tests. Perform all other aggregate quality tests listed in Table 1. Document all test results on the mixture design report. The Engineer may perform tests on independent or split samples to verify Contractor test results. Stockpile aggregates for each source and type separately. Determine aggregate gradations for mixture design and production testing based on the washed sieve analysis given in Tex-200-F, Part II.

2.1.1. **Coarse Aggregate**. Coarse aggregate stockpiles must have no more than 20% material passing the No. 8 sieve. Aggregates from sources listed in the Department's *Bituminous Rated Source Quality Catalog* (BRSQC) are preapproved for use. Use only the rated values for hot-mix listed in the BRSQC. Rated values for surface treatment (ST) do not apply to coarse aggregate sources used in hot-mix asphalt.

For sources not listed on the Department's BRSQC:

- build an individual stockpile for each material;
- request the Department test the stockpile for specification compliance; and
- once approved, do not add material to the stockpile unless otherwise approved.

Provide aggregate from non-listed sources only when tested by the Engineer and approved before use. Allow 30 calendar days for the Engineer to sample, test, and report results for non-listed sources.

Provide coarse aggregate with at least the minimum SAC shown on the plans. SAC requirements only apply to aggregates used on the surface of travel lanes. SAC requirements apply to aggregates used on surfaces other than travel lanes when shown on the plans. The SAC for sources on the Department's *Aggregate Quality Monitoring Program* (AQMP) (Tex-499-A) is listed in the BRSQC.

2.1.1.1. **Blending Class A and Class B Aggregates**. Class B aggregate meeting all other requirements in Table 1 may be blended with a Class A aggregate to meet requirements for Class A materials, unless otherwise shown on the plans. Ensure that at least 50% by weight, or volume if required, of the material retained on the No. 4 sieve comes from the Class A aggregate source when blending Class A and B aggregates to meet a Class A requirement unless otherwise shown on the plans. Blend by volume if the bulk specific gravities of the Class A and B aggregates differ by more than 0.300. Coarse aggregate from RAP and Recycled Asphalt Shingles (RAS) will be considered as Class B aggregate for blending purposes.

The Engineer may perform tests at any time during production, when the Contractor blends Class A and B aggregates to meet a Class A requirement, to ensure that at least 50% by weight, or volume if required, of the material retained on the No. 4 sieve comes from the Class A aggregate source. The Engineer will use the Department's mix design template, when electing to verify conformance, to calculate the percent of Class A aggregate retained on the No. 4 sieve by inputting the bin percentages shown from readouts in the control room at the time of production and stockpile gradations measured at the time of production. The Engineer may determine the gradations based on either washed or dry sieve analysis from samples obtained from individual aggregate cold feed bins or aggregate stockpiles. The Engineer may perform spot checks using the gradations supplied by the Contractor on the mixture design report as an input for the template; however, a failing spot check will require confirmation with a stockpile gradation determined by the Engineer.

2.1.1.2. **Micro-Deval Abrasion**. The Engineer will perform a minimum of one Micro-Deval abrasion test in accordance with Tex-461-A for each coarse aggregate source used in the mixture design that has a Rated Source Soundness Magnesium (RSSM) loss value greater than 15 as listed in the BRSQC. The Engineer will perform testing before the start of production and may perform additional testing at any time during production. The Engineer may obtain the coarse aggregate samples from each coarse aggregate source or may require the Contractor to obtain the samples. The Engineer may waive all Micro-Deval testing based on a satisfactory test history of the same aggregate source.

The Engineer will estimate the magnesium sulfate soundness loss for each coarse aggregate source, when tested, using the following formula:

$$Mg_{est.} = (RSSM)(MD_{act.}/RSMD)$$

where:
$Mg_{est.}$ = magnesium sulfate soundness loss
$MD_{act.}$ = actual Micro-Deval percent loss
$RSMD$ = Rated Source Micro-Deval

When the estimated magnesium sulfate soundness loss is greater than the maximum magnesium sulfate soundness loss specified, the coarse aggregate source will not be allowed for use unless otherwise approved. The Engineer will consult the Soils and Aggregates Section of the Materials and Tests Division, and additional testing may be required before granting approval.

2.1.2. **Intermediate Aggregate**. Aggregates not meeting the definition of coarse or fine aggregate will be defined as intermediate aggregate. Supply intermediate aggregates, when used that are free from organic impurities. The Engineer may test the intermediate aggregate in accordance with Tex-408-A to verify the material is free from organic impurities. Supply intermediate aggregate from coarse aggregate sources, when used that meet the requirements shown in Table 1 unless otherwise approved.

Test the stockpile if 10% or more of the stockpile is retained on the No. 4 sieve, and verify that it meets the requirements in Table 1 for crushed face count (Tex-460-A) and flat and elongated particles (Tex-280-F).

2.1.3. **Fine Aggregate**. Fine aggregates consist of manufactured sands, screenings, and field sands. Fine aggregate stockpiles must meet the gradation requirements in Table 2. Supply fine aggregates that are free from organic impurities. The Engineer may test the fine aggregate in accordance with Tex-408-A to verify the material is free from organic impurities. Unless otherwise shown on the plans, up to 10% of the total aggregate may be field sand or other uncrushed fine aggregate. Use fine aggregate, with the exception of field sand, from coarse aggregate sources that meet the requirements shown in Table 1 unless otherwise approved.

Test the stockpile if 10% or more of the stockpile is retained on the No. 4 sieve and verify that it meets the requirements in Table 1 for crushed face count (Tex-460-A) and flat and elongated particles (Tex-280-F).

**Table 1**
**Aggregate Quality Requirements**

| Property | Test Method | Requirement |
|---|---|---|
| **Coarse Aggregate** | | |
| SAC | Tex-499-A (AQMP) | As shown on the plans |
| Deleterious material, %, Max | Tex-217-F, Part I | 1.0 |
| Decantation, %, Max | Tex-217-F, Part II | 1.5 |
| Micro-Deval abrasion, % | Tex-461-A | Note 1 |
| Los Angeles abrasion, %, Max | Tex-410-A | 35[2] |
| Magnesium sulfate soundness, 5 cycles, %, Max | Tex-411-A | 25[3] |
| Crushed face count,[4] %, Min | Tex-460-A, Part I | 85 |
| Flat and elongated particles @ 5:1, %, Max | Tex-280-F | 10 |
| **Fine Aggregate** | | |
| Linear shrinkage, %, Max | Tex-107-E | 3 |
| Sand equivalent, %, Min | Tex-203-F | 45 |

1. Used to estimate the magnesium sulfate soundness loss in accordance with Section 3077.2.1.1.2., "Micro-Deval Abrasion."
2. For base mixtures defined in Section 3077.2.7., "Recycled Materials," the Los Angeles abrasion may be increased to a maximum of 40%.
3. For base mixtures defined in Section 3077.2.7., "Recycled Materials," the magnesium sulfate soundness, five cycles, may be increased to a maximum of 30%.
4. Only applies to crushed gravel.

**Table 2**
**Gradation Requirements for Fine Aggregate**

| Sieve Size | % Passing by Weight or Volume |
|---|---|
| 3/8" | 100 |
| #8 | 70–100 |
| #200 | 0–30 |

2.2. **Mineral Filler**. Mineral filler consists of finely divided mineral matter such as agricultural lime, crusher fines, hydrated lime, or fly ash. Mineral filler is allowed unless otherwise shown on the plans. Use no more than 2% hydrated lime or fly ash unless otherwise shown on the plans. Use no more than 1% hydrated lime if a substitute binder is used unless otherwise shown on the plans or allowed. Test all mineral fillers except hydrated lime and fly ash in accordance with Tex-107-E to ensure specification compliance. The plans may require or disallow specific mineral fillers. Provide mineral filler, when used, that:

- is sufficiently dry, free-flowing, and free from clumps and foreign matter as determined by the Engineer;
- does not exceed 3% linear shrinkage when tested in accordance with Tex-107-E; and
- meets the gradation requirements in Table 3, unless otherwise shown on the plans.

**Table 3**
**Gradation Requirements for Mineral Filler**

| Sieve Size | % Passing by Weight or Volume |
|---|---|
| #8 | 100 |
| #200 | 55–100 |

2.3. **Baghouse Fines**. Fines collected by the baghouse or other dust-collecting equipment may be reintroduced into the mixing drum.

2.4. **Asphalt Binder**. Furnish the type and grade of performance-graded (PG) asphalt specified on the plans.

2.5. **Tack Coat**. Furnish CSS-1H, SS-1H, or a PG binder with a minimum high-temperature grade of PG 58 for tack coat binder in accordance with Item 300, "Asphalts, Oils, and Emulsions." Specialized tack coat materials listed on the Department's MPL are allowed or required when shown on the plans. Do not dilute emulsified asphalts at the terminal, in the field, or at any other location before use.

2.6. **Additives**. Use the type and rate of additive specified when shown on the plans. Additives that facilitate mixing, compaction, or improve the quality of the mixture are allowed when approved. Provide the Engineer with documentation such as the bill of lading showing the quantity of additives used in the project unless otherwise directed.

2.6.1. **Lime and Liquid Antistripping Agent**. When lime or a liquid antistripping agent is used, add in accordance with Item 301, "Asphalt Antistripping Agents." Do not add lime directly into the mixing drum of any plant where lime is removed through the exhaust stream unless the plant has a baghouse or dust collection system that reintroduces the lime into the drum.

2.6.2. **Warm Mix Asphalt (WMA)**. Warm Mix Asphalt (WMA) is defined as HMA that is produced within a target temperature discharge range of 215°F and 275°F using approved WMA additives or processes from the Department's MPL.

WMA is allowed for use on all projects and is required when shown on the plans. When WMA is required, the maximum placement or target discharge temperature for WMA will be set at a value below 275°F.

Department-approved WMA additives or processes may be used to facilitate mixing and compaction of HMA produced at target discharge temperatures above 275°F; however, such mixtures will not be defined as WMA.

2.6.3. **Compaction Aid.** Compaction Aid is defined as a chemical warm mix additive that is used to produce an asphalt mixture at a discharge temperature greater than 275°F.

Compaction Aid is allowed for use on all projects and is required when shown on the plans.

2.7. **Recycled Materials**. Use of RAP and RAS is permitted unless otherwise shown on the plans. Use of RAS is restricted to only intermediate and base mixes unless otherwise shown on the plans. Do not exceed the maximum allowable percentages of RAP and RAS shown in Table 4. The allowable percentages shown in Table 4 may be decreased or increased when shown on the plans. Determine the asphalt binder content and gradation of the RAP and RAS stockpiles for mixture design purposes in accordance with Tex-236-F, Part I. The Engineer may verify the asphalt binder content of the stockpiles at any time during production. Perform other tests on RAP and RAS when shown on the plans. Asphalt binder from RAP and RAS is designated as recycled asphalt binder. Calculate and ensure that the ratio of the recycled asphalt binder to total binder does not exceed the percentages shown in Table 5 during mixture design and HMA production when RAP or RAS is used. Use a separate cold feed bin for each stockpile of RAP and RAS during HMA production.

Surface, intermediate, and base mixes referenced in Tables 4 and 5 are defined as follows:

- **Surface**. The final HMA lift placed at the top of the pavement structure or placed directly below mixtures produced in accordance with Items 316, 342, 347, or 348;
- **Intermediate**. Mixtures placed below an HMA surface mix and less than or equal to 8.0 in. from the riding surface; and
- **Base**. Mixtures placed greater than 8.0 in. from the riding surface. Unless otherwise shown on the plans, mixtures used for bond breaker are defined as base mixtures.

2.7.1. **RAP**. RAP is salvaged, milled, pulverized, broken, or crushed asphalt pavement. Fractionated RAP is defined as a stockpile that contains RAP material with a minimum of 95.0% passing the 3/8-in. or 1/2-in.

sieve, before burning in the ignition oven, unless otherwise approved. The Engineer may allow the Contractor to use an alternate to the 3/8-in. or 1/2-in. screen to fractionate the RAP.

Use of Contractor-owned RAP including HMA plant waste is permitted unless otherwise shown on the plans. Department-owned RAP stockpiles are available for the Contractor's use when the stockpile locations are shown on the plans. If Department-owned RAP is available for the Contractor's use, the Contractor may use Contractor-owned fractionated RAP and replace it with an equal quantity of Department-owned RAP. Department-owned RAP generated through required work on the Contract is available for the Contractor's use when shown on the plans. Perform any necessary tests to ensure Contractor- or Department-owned RAP is appropriate for use. The Department will not perform any tests or assume any liability for the quality of the Department-owned RAP unless otherwise shown on the plans. The Contractor will retain ownership of RAP generated on the project when shown on the plans.

Do not use Department- or Contractor-owned RAP contaminated with dirt or other objectionable materials. Do not use Department- or Contractor-owned RAP if the decantation value exceeds 5% and the plasticity index is greater than eight. Test the stockpiled RAP for decantation in accordance with Tex-406-A, Part I. Determine the plasticity index in accordance with Tex-106-E if the decantation value exceeds 5%. The decantation and plasticity index requirements do not apply to RAP samples with asphalt removed by extraction or ignition.

Do not intermingle Contractor-owned RAP stockpiles with Department-owned RAP stockpiles. Remove unused Contractor-owned RAP material from the project site upon completion of the project. Return unused Department-owned RAP to the designated stockpile location.

**Table 4**
**Maximum Allowable Amounts of RAP[1]**

| Maximum Allowable Fractionated RAP (%) | | |
|---|---|---|
| **Surface** | **Intermediate** | **Base** |
| 20.0 | 30.0 | 35.0 |

1. Must also meet the recycled binder to total binder ratio shown in Table 5.

2.7.2. **RAS**. Use of post-manufactured RAS or post-consumer RAS (tear-offs) is not permitted in surface mixtures unless otherwise shown on the plans. RAS may be used in intermediate and base mixtures unless otherwise shown on the plans. Up to 3% RAS may be used separately or as a replacement for fractionated RAP in accordance with Table 4 and Table 5. RAS is defined as processed asphalt shingle material from manufacturing of asphalt roofing shingles or from re-roofing residential structures. Post-manufactured RAS is processed manufacturer's shingle scrap by-product. Post-consumer RAS is processed shingle scrap removed from residential structures. Comply with all regulatory requirements stipulated for RAS by the TCEQ. RAS may be used separately or in conjunction with RAP.

Process the RAS by ambient grinding or granulating such that 100% of the particles pass the 3/8 in. sieve when tested in accordance with Tex-200-F, Part I. Perform a sieve analysis on processed RAS material before extraction (or ignition) of the asphalt binder.

Add sand meeting the requirements of Table 1 and Table 2 or fine RAP to RAS stockpiles if needed to keep the processed material workable. Any stockpile that contains RAS will be considered a RAS stockpile and be limited to no more than 3.0% of the HMA mixture in accordance with Table 4.

Certify compliance of the RAS with DMS-11000, "Evaluating and Using Nonhazardous Recyclable Materials Guidelines." Treat RAS as an established nonhazardous recyclable material if it has not come into contact with any hazardous materials. Use RAS from shingle sources on the Department's MPL. Remove substantially all materials before use that are not part of the shingle, such as wood, paper, metal, plastic, and felt paper. Determine the deleterious content of RAS material for mixture design purposes in accordance with Tex-217-F, Part III. Do not use RAS if deleterious materials are more than 0.5% of the stockpiled RAS unless

otherwise approved. Submit a sample for approval before submitting the mixture design. The Department will perform the testing for deleterious material of RAS to determine specification compliance.

2.8. **Substitute Binders**. Unless otherwise shown on the plans, the Contractor may use a substitute PG binder listed in Table 5 instead of the PG binder originally specified if using recycled materials, and if the substitute PG binder and mixture made with the substitute PG binder meet the following:

- the substitute binder meets the specification requirements for the substitute binder grade in accordance with Section 300.2.10., "Performance-Graded Binders;" and
- the mixture has less than 10.0 mm of rutting on the Hamburg Wheel test (Tex-242-F) after the number of passes required for the originally specified binder. Use of substitute PG binders may only be allowed at the discretion of the Engineer if the Hamburg Wheel test results are between 10.0 mm and 12.5 mm.

**Table 5**
**Allowable Substitute PG Binders and Maximum Recycled Binder Ratios**

| Originally Specified PG Binder | Allowable Substitute PG Binder for Surface Mixes | Allowable Substitute PG Binder for Intermediate and Base Mixes | Maximum Ratio of Recycled Binder[1] to Total Binder (%) | | |
|---|---|---|---|---|---|
| | | | Surface | Intermediate | Base |
| 76-22[4,5] | 70-22 | 70-22 | 15.0 | 25.0 | 30.0 |
| 70-22[2,5] | N/A | 64-22 | 15.0 | 25.0 | 30.0 |
| 64-22[2,3] | N/A | N/A | 15.0 | 25.0 | 30.0 |
| 76-28[4,5] | 70-28 | 70-28 | 15.0 | 25.0 | 30.0 |
| 70-28[2,5] | N/A | 64-28 | 15.0 | 25.0 | 30.0 |
| 64-28[2,3] | N/A | N/A | 15.0 | 25.0 | 30.0 |

1. Combined recycled binder from RAP and RAS. RAS is not permitted in surface mixtures unless otherwise shown on the plans.
2. Binder substitution is not allowed for surface mixtures.
3. Binder substitution is not allowed for intermediate and base mixtures.
4. Use no more than 15.0% recycled binder in surface mixtures when using this originally specified PG binder.
5. Use no more than 25.0% recycled binder when using this originally specified PG binder for intermediate mixtures. Use no more than 30.0% recycled binder when using this originally specified PG binder for base mixtures.

## 3. EQUIPMENT

Provide required or necessary equipment in accordance with Item 320, "Equipment for Asphalt Concrete Pavement."

## 4. CONSTRUCTION

Produce, haul, place, and compact the specified paving mixture. In addition to tests required by the specification, Contractors may perform other QC tests as deemed necessary. At any time during the project, the Engineer may perform production and placement tests as deemed necessary in accordance with Item 5, "Control of the Work." Schedule and participate in a mandatory pre-paving meeting with the Engineer on or before the first day of paving unless otherwise shown on the plans.

4.1. **Certification**. Personnel certified by the Department-approved hot-mix asphalt certification program must conduct all mixture designs, sampling, and testing in accordance with Table 6. Supply the Engineer with a list of certified personnel and copies of their current certificates before beginning production and when personnel

changes are made. Provide a mixture design developed and signed by a Level 2 certified specialist. Provide Level 1A certified specialists at the plant during production operations. Provide Level 1B certified specialists to conduct placement tests. Provide AGG101 certified specialists for aggregate testing.

**Table 6**
**Test Methods, Test Responsibility, and Minimum Certification Levels**

| Test Description | Test Method | Contractor | Engineer | Level[1] |
|---|---|---|---|---|
| **1. Aggregate and Recycled Material Testing** | | | | |
| Sampling | Tex-221-F | ✓ | ✓ | 1A/AGG101 |
| Dry sieve | Tex-200-F, Part I | ✓ | ✓ | 1A/AGG101 |
| Washed sieve | Tex-200-F, Part II | ✓ | ✓ | 1A/AGG101 |
| Deleterious material | Tex-217-F, Parts I & III | ✓ | ✓ | AGG101 |
| Decantation | Tex-217-F, Part II | ✓ | ✓ | AGG101 |
| Los Angeles abrasion | Tex-410-A | | ✓ | TxDOT |
| Magnesium sulfate soundness | Tex-411-A | | ✓ | TxDOT |
| Micro-Deval abrasion | Tex-461-A | | ✓ | AGG101 |
| Crushed face count | Tex-460-A | ✓ | ✓ | AGG101 |
| Flat and elongated particles | Tex-280-F | ✓ | ✓ | AGG101 |
| Linear shrinkage | Tex-107-E | ✓ | ✓ | AGG101 |
| Sand equivalent | Tex-203-F | ✓ | ✓ | AGG101 |
| Bulk specific gravity | Tex-201-F | ✓ | ✓ | AGG101 |
| Unit weight | Tex-404-A | ✓ | ✓ | AGG101 |
| Organic impurities | Tex-408-A | ✓ | ✓ | AGG101 |
| **2. Asphalt Binder & Tack Coat Sampling** | | | | |
| Asphalt binder sampling | Tex-500-C, Part II | ✓ | ✓ | 1A/1B |
| Tack coat sampling | Tex-500-C, Part III | ✓ | ✓ | 1A/1B |
| **3. Mix Design & Verification** | | | | |
| Design and JMF changes | Tex-204-F | ✓ | ✓ | 2 |
| Mixing | Tex-205-F | ✓ | ✓ | 2 |
| Molding (SGC) | Tex-241-F | ✓ | ✓ | 1A |
| Laboratory-molded density | Tex-207-F, Parts I & VI | ✓ | ✓ | 1A |
| Rice gravity | Tex-227-F, Part II | ✓ | ✓ | 1A |
| Ignition oven correction factors[2] | Tex-236-F, Part II | ✓ | ✓ | 2 |
| Indirect tensile strength | Tex-226-F | ✓ | ✓ | 1A |
| Hamburg Wheel test | Tex-242-F | ✓ | ✓ | 1A |
| Boil test | Tex-530-C | ✓ | ✓ | 1A |
| **4. Production Testing** | | | | |
| Selecting production random numbers | Tex-225-F, Part I | | ✓ | 1A |
| Mixture sampling | Tex-222-F | ✓ | ✓ | 1A/1B |
| Molding (SGC) | Tex-241-F | ✓ | ✓ | 1A |
| Laboratory-molded density | Tex-207-F, Parts I & VI | ✓ | ✓ | 1A |
| Rice gravity | Tex-227-F, Part II | ✓ | ✓ | 1A |
| Gradation & asphalt binder content[2] | Tex-236-F, Part I | ✓ | ✓ | 1A |
| Control charts | Tex-233-F | ✓ | ✓ | 1A |
| Moisture content | Tex-212-F, Part II | ✓ | ✓ | 1A/AGG101 |
| Hamburg Wheel test | Tex-242-F | ✓ | ✓ | 1A |
| Micro-Deval abrasion | Tex-461-A | | ✓ | AGG101 |
| Boil test | Tex-530-C | ✓ | ✓ | 1A |
| Abson recovery | Tex-211-F | | ✓ | TxDOT |
| **5. Placement Testing** | | | | |
| Selecting placement random numbers | Tex-225-F, Part II | | ✓ | 1B |
| Trimming roadway cores | Tex-251-F, Parts I & II | ✓ | ✓ | 1A/1B |
| In-place air voids | Tex-207-F, Parts I & VI | ✓ | ✓ | 1A |
| In-place density (nuclear method) | Tex-207-F, Part III | ✓ | | 1B |
| Establish rolling pattern | Tex-207-F, Part IV | ✓ | | 1B |
| Control charts | Tex-233-F | ✓ | ✓ | 1A |
| Ride quality measurement | Tex-1001-S | ✓ | ✓ | Note 3 |
| Segregation (density profile) | Tex-207-F, Part V | ✓ | ✓ | 1B |
| Longitudinal joint density | Tex-207-F, Part VII | ✓ | ✓ | 1B |
| Thermal profile | Tex-244-F | ✓ | ✓ | 1B |
| Shear Bond Strength Test | Tex-249-F | | ✓ | TxDOT |

1. Level 1A, 1B, AGG101, and 2 are certification levels provided by the Hot Mix Asphalt Center certification program.
2. Refer to Section 3077.4.9.2.3., "Production Testing," for exceptions to using an ignition oven.
3. Profiler and operator are required to be certified at the Texas A&M Transportation Institute facility when Surface Test Type B is specified.

4.2. **Reporting and Responsibilities**. Use Department-provided templates to record and calculate all test data, including mixture design, production and placement QC/QA, control charts, thermal profiles, segregation density profiles, and longitudinal joint density. Obtain the current version of the templates at http://www.txdot.gov/inside-txdot/forms-publications/consultants-contractors/forms/site-manager.html or from the Engineer. The Engineer and the Contractor will provide any available test results to the other party when requested. The maximum allowable time for the Contractor and Engineer to exchange test data is as given in Table 7 unless otherwise approved. The Engineer and the Contractor will immediately report to the other party any test result that requires suspension of production or placement, a payment adjustment less than 1.000, or that fails to meet the specification requirements. Record and electronically submit all test results and pertinent information on Department-provided templates.

Subsequent sublots placed after test results are available to the Contractor, which require suspension of operations, may be considered unauthorized work. Unauthorized work will be accepted or rejected at the discretion of the Engineer in accordance with Article 5.3., "Conformity with Plans, Specifications, and Special Provisions."

**Table 7**
**Reporting Schedule**

| Description | Reported By | Reported To | To Be Reported Within |
|---|---|---|---|
| **Production Quality Control** | | | |
| Gradation[1] | Contractor | Engineer | 1 working day of completion of the sublot |
| Asphalt binder content[1] | | | |
| Laboratory-molded density[2] | | | |
| Moisture content[3] | | | |
| Boil test[3] | | | |
| **Production Quality Assurance** | | | |
| Gradation[3] | Engineer | Contractor | 1 working day of completion of the sublot |
| Asphalt binder content[3] | | | |
| Laboratory-molded density[1] | | | |
| Hamburg Wheel test[4] | | | |
| Boil test[3] | | | |
| Binder tests[4] | | | |
| **Placement Quality Control** | | | |
| In-place air voids[2] | Contractor | Engineer | 1 working day of completion of the lot |
| Segregation[1] | | | |
| Longitudinal joint density[1] | | | |
| Thermal profile[1] | | | |
| **Placement Quality Assurance** | | | |
| In-place air voids[1] | Engineer | Contractor | 1 working day after receiving the trimmed cores[5] |
| Segregation[3] | | | 1 working day of completion of the lot |
| Longitudinal joint density[3] | | | |
| Thermal profile[3] | | | |
| Aging ratio[4] | | | |
| Payment adjustment summary | Engineer | Contractor | 2 working days of performing all required tests and receiving Contractor test data |

1. These tests are required on every sublot.
2. Optional test. When performed on split samples, report the results as soon as they become available.
3. To be performed at the frequency specified in Table 17 or as shown on the plans.
4. To be reported as soon as the results become available.
5. Two days are allowed if cores cannot be dried to constant weight within 1 day.

The Engineer will use the Department-provided template to calculate all payment adjustment factors for the lot. Sublot samples may be discarded after the Engineer and Contractor sign off on the payment adjustment summary documentation for the lot.

Use the procedures described in Tex-233-F to plot the results of all quality control (QC) and quality assurance (QA) testing. Update the control charts as soon as test results for each sublot become available.

Make the control charts readily accessible at the field laboratory. The Engineer may suspend production for failure to update control charts.

4.3. **Quality Control Plan (QCP**). Develop and follow the QCP in detail. Obtain approval for changes to the QCP made during the project. The Engineer may suspend operations if the Contractor fails to comply with the QCP.

Submit a written QCP before the mandatory pre-paving meeting. Receive approval of the QCP before beginning production. Include the following items in the QCP:

4.3.1. **Project Personnel**. For project personnel, include:

- a list of individuals responsible for QC with authority to take corrective action;
- current contact information for each individual listed; and
- current copies of certification documents for individuals performing specified QC functions.

4.3.2. **Material Delivery and Storage**. For material delivery and storage, include:

- the sequence of material processing, delivery, and minimum quantities to assure continuous plant operations;
- aggregate stockpiling procedures to avoid contamination and segregation;
- frequency, type, and timing of aggregate stockpile testing to assure conformance of material requirements before mixture production; and
- procedure for monitoring the quality and variability of asphalt binder.

4.3.3. **Production**. For production, include:

- loader operation procedures to avoid contamination in cold bins;
- procedures for calibrating and controlling cold feeds;
- procedures to eliminate debris or oversized material;
- procedures for adding and verifying rates of each applicable mixture component (e.g., aggregate, asphalt binder, RAP, RAS, lime, liquid antistrip, WMA);
- procedures for reporting job control test results; and
- procedures to avoid segregation and drain-down in the silo.

4.3.4. **Loading and Transporting**. For loading and transporting, include:

- type and application method for release agents; and
- truck loading procedures to avoid segregation.

4.3.5. **Placement and Compaction**. For placement and compaction, include:

- proposed agenda for mandatory pre-paving meeting, including date and location;
- proposed paving plan (e.g., paving widths, joint offsets, and lift thicknesses);
- type and application method for release agents in the paver and on rollers, shovels, lutes, and other utensils;
- procedures for the transfer of mixture into the paver, while avoiding segregation and preventing material spillage;
- process to balance production, delivery, paving, and compaction to achieve continuous placement operations and good ride quality;
- paver operations (e.g., operation of wings, height of mixture in auger chamber) to avoid physical and thermal segregation and other surface irregularities; and
- procedures to construct quality longitudinal and transverse joints.

4.4. **Mixture Design**.

4.4.1. **Design Requirements**. Use the SP design procedure provided in Tex-204-F, unless otherwise shown on the plans. Design the mixture to meet the requirements listed in Tables 1, 2, 3, 4, 5, 8, 9, 10, and 11.

Design the mixture at 50 gyrations (Ndesign). Use a target laboratory-molded density of 96.0% to design the mixture; however, adjustments can be made to the Ndesign value as noted in Table 10. The Ndesign level may be reduced to at least 35 gyrations at the Contractor's discretion.

Use an approved laboratory from the Department's MPL to perform the Hamburg Wheel test and provide results with the mixture design, or provide the laboratory mixture and request that the Department perform the Hamburg Wheel test. The Engineer will be allowed 10 working days to provide the Contractor with Hamburg Wheel test results on the laboratory mixture design.

The Engineer will provide the mixture design when shown on the plans. The Contractor may submit a new mixture design at any time during the project. The Engineer will verify and approve all mixture designs (JMF1) before the Contractor can begin production.

The aggregate gradation may pass below or through the reference zone shown in Table 9 unless otherwise shown on the plans. Design a mixture with a gradation that has stone-on-stone contact and passes below the reference zone shown in Table 9 when shown on the plans. Verify stone-on-stone contact using the method given in the SP design procedure in Tex-204-F, Part IV.

Provide the Engineer with a mixture design report using the Department-provided template. Include the following items in the report:

- the combined aggregate gradation, source, specific gravity, and percent of each material used;
- asphalt binder content and aggregate gradation of RAP and RAS stockpiles;
- the Ndesign level used;
- results of all applicable tests;
- the mixing and molding temperatures;
- the signature of the Level 2 person or persons that performed the design;
- the date the mixture design was performed; and
- a unique identification number for the mixture design.

**Table 8**
**Master Gradation Limits (% Passing by Weight or Volume) and VMA Requirements**

| Sieve Size | SP-B Intermediate | SP-C Surface | SP-D Fine Mixture |
|---|---|---|---|
| 2" | – | – | – |
| 1-1/2" | 100.0[1] | – | – |
| 1" | 98.0–100.0 | 100.0[1] | – |
| 3/4" | 90.0–100.0 | 98.0–100.0 | 100.0[1] |
| 1/2" | Note[2] | 90.0–100.0 | 98.0–100.0 |
| 3/8" | – | Note[2] | 90.0–100.0 |
| #4 | 23.0–90.0 | 28.0–90.0 | 32.0–90.0 |
| #8 | 23.0–34.6 | 28.0–37.0 | 32.0–40.0 |
| #16 | 2.0–28.3 | 2.0–31.6 | 2.0–37.6 |
| #30 | 2.0–20.7 | 2.0–23.1 | 2.0–27.5 |
| #50 | 2.0–13.7 | 2.0–15.5 | 2.0–18.7 |
| #200 | 2.0–8.0 | 2.0–10.0 | 2.0–10.0 |
| **Design VMA, % Minimum** | | | |
| – | 14.0 | 15.0 | 16.0 |
| **Production (Plant-Produced) VMA, % Minimum** | | | |
| – | 13.5 | 14.5 | 15.5 |

1. Defined as maximum sieve size. No tolerance allowed.
2. Must retain at least 10% cumulative.

**Table 9**
**Reference Zones (% Passing by Weight or Volume)**

| Sieve Size | SP-B Intermediate | SP-C Surface | SP-D Fine Mixture |
|---|---|---|---|
| 2" | – | – | – |
| 1-1/2" | – | – | – |
| 1" | – | – | – |
| 3/4" | – | – | – |
| 1/2" | – | – | – |
| 3/8" | – | – | – |
| #4 | – | – | – |
| #8 | 34.6–34.6 | 39.1–39.1 | 47.2–47.2 |
| #16 | 22.3–28.3 | 25.6–31.6 | 31.6–37.6 |
| #30 | 16.7–20.7 | 19.1–23.1 | 23.5–27.5 |
| #50 | 13.7–13.7 | 15.5–15.5 | 18.7–18.7 |
| #200 | – | – | – |

**Table 10**
**Laboratory Mixture Design Properties**

| Mixture Property | Test Method | Requirement |
|---|---|---|
| Target laboratory-molded density, % | Tex-207-F | 96.0 |
| Design gyrations (Ndesign) | Tex-241-F | 50[1] |
| Indirect tensile strength (dry), psi | Tex-226-F | 85–200[2] |
| Dust/asphalt binder ratio[3] | – | 0.6–1.4 |
| Boil test[4] | Tex-530-C | – |

1. Adjust within a range of 35–100 gyrations when shown on the plans or specification or mutually agreed between the Engineer and Contractor.
2. The Engineer may allow the IDT strength to exceed 200 psi if the corresponding Hamburg Wheel rut depth is greater than 3.0 mm and less than 12.5 mm.
3. Defined as % passing #200 sieve divided by asphalt binder content.
4. Used to establish baseline for comparison to production results. May be waived when approved.

**Table 11**
**Hamburg Wheel Test Requirements**

| High-Temperature Binder Grade | Test Method | Minimum # of Passes @ 12.5 mm[1] Rut Depth, Tested @ 50°C |
|---|---|---|
| PG 64 or lower | Tex-242-F | 10,000[2] |
| PG 70 | | 15,000[3] |
| PG 76 or higher | | 20,000 |

1. When the rut depth at the required minimum number of passes is less than 3 mm, the Engineer may require the Contractor to lower the Ndesign level to at least 35 gyrations.
2. May be decreased to at least 5,000 passes when shown on the plans.
3. May be decreased to at least 10,000 passes when shown on the plans.

4.4.2. **Job-Mix Formula Approval**. The job-mix formula (JMF) is the combined aggregate gradation, Ndesign level, and target asphalt percentage used to establish target values for hot-mix production. JMF1 is the original laboratory mixture design used to produce the trial batch. When WMA is used, JMF1 may be designed and submitted to the Engineer without including the WMA additive. When WMA is used, document the additive or process used and recommended rate on the JMF1 submittal. The Engineer and the Contractor will verify JMF1 based on plant-produced mixture from the trial batch unless otherwise approved. The Engineer may accept an existing mixture design previously used on a Department project and may waive the trial batch to verify JMF1. The Department may require the Contractor to reimburse the Department for verification tests if more than two trial batches per design are required.

4.4.2.1. **Contractor's Responsibilities**.

4.4.2.1.1. **Providing Superpave Gyratory Compactor (SGC)**. Furnish an SGC calibrated in accordance with Tex-241-F for molding production samples. Locate the SGC at the Engineer's field laboratory and make the SGC available to the Engineer for use in molding production samples.

4.4.2.1.2. **Gyratory Compactor Correlation Factors**. Use Tex-206-F, Part II, to perform a gyratory compactor correlation when the Engineer uses a different SGC. Apply the correlation factor to all subsequent production test results.

4.4.2.1.3. **Submitting JMF1**. Furnish a mix design report (JMF1) with representative samples of all component materials and request approval to produce the trial batch. Provide approximately 10,000 g of the design mixture if opting to have the Department perform the Hamburg Wheel test on the laboratory mixture, and request that the Department perform the test.

4.4.2.1.4. **Supplying Aggregates**. Provide approximately 40 lb. of each aggregate stockpile unless otherwise directed.

4.4.2.1.5. **Supplying Asphalt**. Provide at least 1 gal. of the asphalt material and enough quantities of any additives proposed for use.

4.4.2.1.6. **Ignition Oven Correction Factors**. Determine the aggregate and asphalt correction factors from the ignition oven in accordance with Tex-236-F, Part II. Provide correction factors that are not more than 12 months old. Provide the Engineer with split samples of the mixtures before the trial batch production, including all additives (except water), and blank samples used to determine the correction factors for the ignition oven used for QA testing during production. Correction factors established from a previously approved mixture design may be used for the current mixture design if the mixture design and ignition oven are the same as previously used, unless otherwise directed.

4.4.2.1.7. **Boil Test**. Perform the test and retain the tested sample from Tex-530-C until completion of the project or as directed. Use this sample for comparison purposes during production. The Engineer may waive the requirement for the boil test.

4.4.2.1.8. **Trial Batch Production**. Provide a plant-produced trial batch upon receiving conditional approval of JMF1 and authorization to produce a trial batch, including the WMA additive or process if applicable, for verification testing of JMF1 and development of JMF2. Produce a trial batch mixture that meets the requirements in Table 4, Table 5, and Table 12. The Engineer may accept test results from recent production of the same mixture instead of a new trial batch.

4.4.2.1.9. **Trial Batch Production Equipment**. Use only equipment and materials proposed for use on the project to produce the trial batch.

4.4.2.1.10. **Trial Batch Quantity**. Produce enough quantity of the trial batch to ensure that the mixture meets the specification requirements.

4.4.2.1.11. **Number of Trial Batches**. Produce trial batches as necessary to obtain a mixture that meets the specification requirements.

4.4.2.1.12. **Trial Batch Sampling**. Obtain a representative sample of the trial batch and split it into 3 equal portions in accordance with Tex-222-F. Label these portions as “Contractor,” “Engineer,” and “Referee.” Deliver samples to the appropriate laboratory as directed.

4.4.2.1.13. **Trial Batch Testing**. Test the trial batch to ensure the mixture produced using the proposed JMF1 meets the mixture requirements in Table 12. Ensure the trial batch mixture is also in compliance with the Hamburg Wheel-requirement in Table 11. Use a Department-approved laboratory to perform the Hamburg Wheel test on the trial batch mixture or request that the Department perform the Hamburg Wheel test.

The Engineer will be allowed 10 working days to provide the Contractor with Hamburg Wheel test results on the trial batch. Provide the Engineer with a copy of the trial batch test results.

4.4.2.1.14. **Development of JMF2**. Evaluate the trial batch test results after the Engineer grants full approval of JMF1 based on results from the trial batch, determine the optimum mixture proportions, and submit as JMF2.

Adjust the asphalt binder content or gradation to achieve the specified target laboratory-molded density. The asphalt binder content established for JMF2 is not required to be within any tolerance of the optimum asphalt binder content established for JMF1; however, mixture produced using JMF2 must meet the voids in mineral aggregates (VMA) requirements for production shown in Table 8. If the optimum asphalt binder content for JMF2 is more than 0.5% lower than the optimum asphalt binder content for JMF1, the Engineer may perform or require the Contractor to perform Tex-226-F on Lot 1 production to confirm the indirect tensile strength does not exceed 200 psi. Verify that JMF2 meets the mixture requirements in Table 4 and Table 5.

4.4.2.1.15. **Mixture Production**. Use JMF2 to produce Lot 1 as described in Section 3077.4.9.3.1.1., "Lot 1 Placement," after receiving approval for JMF2 and a passing result from the Department's or a Department-approved laboratory's Hamburg Wheel test on the trial batch. If desired, proceed to Lot 1 production, once JMF2 is approved, at the Contractor's risk without receiving the results from the Department's Hamburg Wheel test on the trial batch.

Notify the Engineer if electing to proceed without Hamburg Wheel test results from the trial batch. Note that the Engineer may require up to the entire sublot of any mixture failing the Hamburg Wheel test to be removed and replaced at the Contractor's expense.

4.4.2.1.16. **Development of JMF3**. Evaluate the test results from Lot 1, determine the optimum mixture proportions, and submit as JMF3 for use in Lot 2.

4.4.2.1.17. **JMF Adjustments**. If JMF adjustments are necessary to achieve the specified requirements, make the adjustment before beginning a new lot. The adjusted JMF must:

- be provided to the Engineer in writing before the start of a new lot;
- be numbered in sequence to the previous JMF;
- meet the mixture requirements in Table 4 and Table 5;
- meet the master gradation limits shown in Table 8; and
- be within the operational tolerances of JMF2 listed in Table 12.

4.4.2.1.18. **Requesting Referee Testing**. Use referee testing, if needed, in accordance with Section 3077.4.9.1., "Referee Testing," to resolve testing differences with the Engineer.

**Table 12**
**Operational Tolerances**

| Description | Test Method | Allowable Difference Between Trial Batch and JMF1 Target | Allowable Difference from Current JMF Target | Allowable Difference between Contractor and Engineer[1] |
|---|---|---|---|---|
| Individual % retained for #8 sieve and larger | Tex-200-F or Tex-236-F | Must be Within Master Grading Limits in Table 8 | ±5.0[2,3] | ±5.0 |
| Individual % retained for sieves smaller than #8 and larger than #200 | | | ±3.0[2,3] | ±3.0 |
| % passing the #200 sieve | | | ±2.0[2,3] | ±1.6 |
| Asphalt binder content, % | Tex-236-F | ±0.5 | ±0.3[3] | ±0.3 |
| Dust/asphalt binder ratio[4] | – | Note 5 | Note 5 | N/A |
| Laboratory-molded density, % | Tex-207-F | ±1.0 | ±1.0 | ±0.5 |
| In-place air voids, % | | N/A | N/A | ±1.0 |
| Laboratory-molded bulk specific gravity | | N/A | N/A | ±0.020 |
| VMA, % min | Tex-204-F | Note 6 | Note 6 | N/A |
| Theoretical maximum specific (Rice) gravity | Tex-227-F | N/A | N/A | ±0.020 |

1. Contractor may request referee testing only when values exceed these tolerances.
2. When within these tolerances, mixture production gradations may fall outside the master grading limits; however, the % passing the #200 will be considered out of tolerance when outside the master grading limits.
3. Only applies to mixture produced for Lot 1 and higher.
4. Defined as % passing #200 sieve divided by asphalt binder content.
5. Verify that Table 10 requirement is met.
6. Verify that Table 8 requirements are met.

4.4.2.2. **Engineer's Responsibilities**.

4.4.2.2.1. **Gyratory Compactor**. The Engineer will use a Department SGC, calibrated in accordance with Tex-241-F, to mold samples for laboratory mixture design verification. For molding trial batch and production specimens, the Engineer will use the Contractor-provided SGC at the field laboratory or provide and use a Department SGC at an alternate location. The Engineer will make the Contractor-provided SGC in the Department field laboratory available to the Contractor for molding verification samples.

4.4.2.2.2. **Conditional Approval of JMF1 and Authorizing Trial Batch**. The Engineer will review and verify conformance of the following information within two working days of receipt:

- the Contractor's mix design report (JMF1);
- the Contractor-provided Hamburg Wheel test results;
- all required materials including aggregates, asphalt, additives, and recycled materials; and
- the mixture specifications.

The Engineer will grant the Contractor conditional approval of JMF1 if the information provided on the paper copy of JMF1 indicates that the Contractor's mixture design meets the specifications. When the Contractor does not provide Hamburg Wheel test results with laboratory mixture design, 10 working days are allowed for conditional approval of JMF1. The Engineer will base full approval of JMF1 on the test results on mixture from the trial batch.

Unless waived, the Engineer will determine the Micro-Deval abrasion loss in accordance with Section 3077.2.1.1.2., "Micro-Deval Abrasion." If the Engineer's test results are pending after two working days, conditional approval of JMF1 will still be granted within 2 working days of receiving JMF1. When the Engineer's test results become available, they will be used for specification compliance.

After conditionally approving JMF1, including either Contractor- or Department-supplied Hamburg Wheel test results, the Contractor is authorized to produce a trial batch.

4.4.2.2.3. **Hamburg Wheel Testing of JMF1**. If the Contractor requests the option to have the Department perform the Hamburg Wheel test on the laboratory mixture, the Engineer will mold samples in accordance with Tex-242-F to verify compliance with the Hamburg Wheel test requirement in Table 11.

4.4.2.2.4. **Ignition Oven Correction Factors**. The Engineer will use the split samples provided by the Contractor to determine the aggregate and asphalt correction factors for the ignition oven used for QA testing during production in accordance with Tex-236-F, Part II. Provide correction factors that are not more than 12 months old.

4.4.2.2.5. **Testing the Trial Batch**. Within 1 full working day, the Engineer will sample and test the trial batch to ensure that the mixture meets the requirements in Table 12. If the Contractor requests the option to have the Department perform the Hamburg Wheel test on the trial batch mixture, the Engineer will mold samples in accordance with Tex-242-F to verify compliance with the Hamburg Wheel test requirement in Table 11.

The Engineer will have the option to perform the following tests on the trial batch:

- Tex-226-F, to verify that the indirect tensile strength meets the requirement shown in Table 10; and
- Tex-530-C, to retain and use for comparison purposes during production.

4.4.2.2.6. **Full Approval of JMF1**. The Engineer will grant full approval of JMF1 and authorize the Contractor to proceed with developing JMF2 if the Engineer's results for the trial batch meet the requirements in Table 12. The Engineer will notify the Contractor that an additional trial batch is required if the trial batch does not meet these requirements.

4.4.2.2.7. **Approval of JMF2**. The Engineer will approve JMF2 within one working day if the mixture meets the requirements in Table 5 and the gradation meets the master grading limits shown in Table 8. The asphalt binder content established for JMF2 is not required to be within any tolerance of the optimum asphalt binder content established for JMF1; however, mixture produced using JMF2 must meet the VMA requirements shown in Table 8. If the optimum asphalt binder content for JMF2 is more than 0.5% lower than the optimum asphalt binder content for JMF1, the Engineer may perform or require the Contractor to perform Tex-226-F on Lot 1 production to confirm the indirect tensile strength does not exceed 200 psi.

4.4.2.2.8. **Approval of Lot 1 Production**. The Engineer will authorize the Contractor to proceed with Lot 1 production (using JMF2) as soon as a passing result is achieved from the Department's or a Department-approved laboratory's Hamburg Wheel test on the trial batch. The Contractor may proceed at its own risk with Lot 1 production without the results from the Hamburg Wheel test on the trial batch.

If the Department's or Department-approved laboratory's sample from the trial batch fails the Hamburg Wheel test, the Engineer will suspend production until further Hamburg Wheel tests meet the specified values. The Engineer may require up to the entire sublot of any mixture failing the Hamburg Wheel test be removed and replaced at the Contractor's expense.

4.4.2.2.9. **Approval of JMF3 and Subsequent JMF Changes**. JMF3 and subsequent JMF changes are approved if they meet the mixture requirements shown in Table 4, Table 5, and the master grading limits shown in Table 8, and are within the operational tolerances of JMF2 shown in Table 12.

4.5. **Production Operations**. Perform a new trial batch when the plant or plant location is changed. Take corrective action and receive approval to proceed after any production suspension for noncompliance to the specification. Submit a new mix design and perform a new trial batch when the asphalt binder content of:

- any RAP stockpile used in the mix is more than 0.5% higher than the value shown on the mixture design report; or
- RAS stockpile used in the mix is more than 2.0% higher than the value shown on the mixture design report.

4.5.1. **Storage and Heating of Materials**. Do not heat the asphalt binder above the temperatures specified in Item 300, "Asphalts, Oils, and Emulsions," or outside the manufacturer's recommended values. Provide the Engineer with daily records of asphalt binder and hot-mix asphalt discharge temperatures (in legible and discernible increments) in accordance with Item 320, "Equipment for Asphalt Concrete Pavement," unless otherwise directed. Do not store mixture for a period long enough to affect the quality of the mixture, nor in any case longer than 12 hr. unless otherwise approved.

4.5.2. **Mixing and Discharge of Materials**. Notify the Engineer of the target discharge temperature and produce the mixture within 25°F of the target. Monitor the temperature of the material in the truck before shipping to ensure that it does not exceed the maximum production temperatures listed in Table 13 (or 275°F for WMA). The Department will not pay for or allow placement of any mixture produced above the maximum production temperatures listed in Table 13.

**Table 13**
**Maximum Production Temperature**

| High-Temperature Binder Grade[1] | Maximum Production Temperature |
|---|---|
| PG 64 | 325°F |
| PG 70 | 335°F |
| PG 76 | 345°F |

1. The high-temperature binder grade refers to the high-temperature grade of the virgin asphalt binder used to produce the mixture.

Produce WMA within the target discharge temperature range of 215°F and 275°F when WMA is required. Take corrective action any time the discharge temperature of the WMA exceeds the target discharge range. The Engineer may suspend production operations if the Contractor's corrective action is not successful at controlling the production temperature within the target discharge range. Note that when WMA is produced, it may be necessary to adjust burners to ensure complete combustion such that no burner fuel residue remains in the mixture.

Control the mixing time and temperature so that substantially all moisture is removed from the mixture before discharging from the plant. Determine the moisture content, if requested, by oven-drying in accordance with Tex-212-F, Part II, and verify that the mixture contains no more than 0.2% of moisture by weight. Obtain the sample immediately after discharging the mixture into the truck, and perform the test promptly.

4.6. **Hauling Operations**. Clean all truck beds before use to ensure that mixture is not contaminated. Use a release agent shown on the Department's MPL to coat the inside bed of the truck when necessary.

Use equipment for hauling as defined in Section 3077.4.7.3.3., "Hauling Equipment." Use other hauling equipment only when allowed.

4.7. **Placement Operations**. Collect haul tickets from each load of mixture delivered to the project and provide the Department's copy to the Engineer approximately every hour or as directed. Use a hand-held thermal camera or infrared thermometer, when a thermal imaging system is not used, to measure and record the internal temperature of the mixture as discharged from the truck or Material Transfer Device (MTD) before or as the mix enters the paver and an approximate station number or GPS coordinates on each ticket. Calculate the daily yield and cumulative yield for the specified lift and provide to the Engineer at the end of paving operations for each day unless otherwise directed. The Engineer may suspend production if the Contractor fails to produce and provide haul tickets and yield calculations by the end of paving operations for each day.

Prepare the surface by removing raised pavement markers and objectionable material such as moisture, dirt, sand, leaves, and other loose impediments from the surface before placing mixture. Remove vegetation from pavement edges. Place the mixture to meet the typical section requirements and produce a smooth, finished surface with a uniform appearance and texture. Offset longitudinal joints of successive courses of hot-mix by at least 6 in. Place mixture so that longitudinal joints on the surface course coincide with lane lines and are not placed in the wheel path, or as directed. Ensure that all finished surfaces will drain properly. Place the

mixture at the rate or thickness shown on the plans. The Engineer will use the guidelines in Table 14 to determine the compacted lift thickness of each layer when multiple lifts are required. The thickness determined is based on the rate of 110 lb./sq. yd. for each inch of pavement unless otherwise shown on the plans.

**Table 14**
**Compacted Lift Thickness and Required Core Height**

| Mixture Type | Compacted Lift Thickness Guidelines | | Minimum Untrimmed Core Height (in.) Eligible for Testing |
|---|---|---|---|
| | Minimum (in.) | Maximum (in.) | |
| SP-B | 2.50 | 4.0 | 2.00 |
| SP-C | 2.00 | 3.0 | 1.25 |
| SP-D | 1.25 | 2.0 | 1.25 |

4.7.1. **Weather Conditions**.

4.7.1.1. **When Using a Thermal Imaging System**. Place mixture when the roadway is dry and the roadway surface temperature is at or above the temperatures listed in Table 15A.The Engineer may restrict the Contractor from paving surface mixtures if the ambient temperature is likely to drop below 32°F within 12 hr. of paving. Place mixtures only when weather conditions and moisture conditions of the roadway surface are suitable as determined by the Engineer. Provide output data from the thermal imaging system to demonstrate to the Engineer that no recurring severe thermal segregation exists in accordance with Section 3077.4.7.3.1.2., "Thermal Imaging System."

**Table 15A**
**Minimum Pavement Surface Temperatures**

| High-Temperature Binder Grade[1] | Minimum Pavement Surface Temperatures (°F) | |
|---|---|---|
| | Subsurface Layers or Night Paving Operations | Surface Layers Placed in Daylight Operations |
| PG 64 | 35 | 40 |
| PG 70 | 45[2] | 50[2] |
| PG 76 | 45[2] | 50[2] |

1. The high-temperature binder grade refers to the high-temperature grade of the virgin asphalt binder used to produce the mixture.
2. Contractors may pave at temperatures 10°F lower than these values when a chemical WMA additive is used as a compaction aid in the mixture or when using WMA.

4.7.1.2. **When Not Using a Thermal Imaging System**. When using a thermal camera instead of the thermal imaging system, place mixture when the roadway surface temperature is at or above the temperatures listed in Table 15B unless otherwise approved or as shown on the plans. Measure the roadway surface temperature with a hand-held thermal camera or infrared thermometer. The Engineer may allow mixture placement to begin before the roadway surface reaches the required temperature if conditions are such that the roadway surface will reach the required temperature within 2 hr. of beginning placement operations. Place mixtures only when weather conditions and moisture conditions of the roadway surface are suitable as determined by the Engineer. The Engineer may restrict the Contractor from paving if the ambient temperature is likely to drop below 32°F within 12 hr. of paving.

**Table 15B**
**Minimum Pavement Surface Temperatures**

| High-Temperature Binder Grade[1] | Minimum Pavement Surface Temperatures (°F) | |
|---|---|---|
| | Subsurface Layers or Night Paving Operations | Surface Layers Placed in Daylight Operations |
| PG 64 | 45 | 50 |
| PG 70 | 55[2] | 60[2] |
| PG 76 | 60[2] | 60[2] |

1. The high-temperature binder grade refers to the high-temperature grade of the virgin asphalt binder used to produce the mixture.
2. Contractors may pave at temperatures 10°F lower than these values when a chemical WMA additive is used as a compaction aid in the mixture, when using WMA, or utilizing a paving process with equipment that eliminates thermal segregation. In such cases, for each sublot and in the presence of the Engineer, use a hand-held thermal camera operated in accordance with Tex-244-F to demonstrate to the satisfaction of the Engineer that the uncompacted mat has no more than 10°F of thermal segregation.

4.7.2. **Tack Coat**.

4.7.2.1. **Application.** Clean the surface before placing the tack coat. The Engineer will set the rate between 0.04 and 0.10 gal. of residual asphalt per square yard of surface area. Apply a uniform tack coat at the specified rate unless otherwise directed. Apply the tack coat in a uniform manner to avoid streaks and other irregular patterns. Apply the tack coat to all surfaces that will come in contact with the subsequent HMA placement, unless otherwise directed. Allow adequate time for emulsion to break completely before placing any material. Prevent splattering of tack coat when placed adjacent to curb, gutter, and structures. Do not dilute emulsified asphalts at the terminal, in the field, or at any other location before use.

4.7.2.2. **Sampling.** The Engineer will obtain at least one sample of the tack coat binder per project in accordance with Tex-500-C, Part III, and test it to verify compliance with Item 300, "Asphalts, Oils, and Emulsions." The Engineer will notify the Contractor when the sampling will occur and will witness the collection of the sample from the asphalt distributor immediately before use.

For emulsions, the Engineer may test as often as necessary to ensure the residual of the emulsion is greater than or equal to the specification requirement in Item 300, "Asphalts, Oils, and Emulsions."

4.7.3. **Lay-Down Operations**. Use the placement temperatures in Table 16 to establish the minimum placement temperature of mixture delivered to the paver.

**Table 16**
**Minimum Mixture Placement Temperature**

| High-Temperature Binder Grade[1] | Minimum Placement Temperature (Before Entering Paver)[2,3] |
|---|---|
| PG 64 | 260˚F |
| PG 70 | 270˚F |
| PG 76 | 280˚F |

1. The high-temperature binder grade refers to the high-temperature grade of the virgin asphalt binder used to produce the mixture.
2. Minimum placement temperatures may be reduced 10°F if using a chemical WMA additive as a compaction aid.
3. When using WMA, the minimum placement temperature is 215°F.

4.7.3.1. **Thermal Profile**. Use a hand-held thermal camera or a thermal imaging system to obtain a continuous thermal profile in accordance with Tex-244-F. Thermal profiles are not applicable in areas described in Section 3077.4.9.3.1.4., "Miscellaneous Areas."

4.7.3.1.1. **Thermal Segregation**.

4.7.3.1.1.1. **Moderate**. Any areas that have a temperature differential greater than 25°F, but not exceeding 50°F, are deemed as moderate thermal segregation.

4.7.3.1.1.2. **Severe**. Any areas that have a temperature differential greater than 50°F are deemed as severe thermal segregation.

4.7.3.1.2. **Thermal Imaging System**. Review the output results when a thermal imaging system is used, and provide the automated report described in Tex-244-F to the Engineer daily unless otherwise directed. Modify the paving process as necessary to eliminate any recurring (moderate or severe) thermal segregation identified by the thermal imaging system. The Engineer may suspend paving operations if the Contractor cannot successfully modify the paving process to eliminate recurring severe thermal segregation. Density profiles are not required and not applicable when using a thermal imaging system. Provide the Engineer with electronic copies of all daily data files that can be used with the thermal imaging system software to generate temperature profile plots daily or upon completion of the project or as requested by the Engineer.

4.7.3.1.3. **Thermal Camera**. When using a thermal camera instead of the thermal imaging system, take immediate corrective action to eliminate recurring moderate thermal segregation when a hand-held thermal camera is used. Evaluate areas with moderate thermal segregation by performing density profiles in accordance with Section 3077.4.9.3.3.2., "Segregation (Density Profile)." Provide the Engineer with the thermal profile of every sublot within one working day of the completion of each lot. When requested by the Engineer, provide the thermal images generated using the thermal camera. Report the results of each thermal profile in accordance with Section 3077.4.2., "Reporting and Responsibilities." The Engineer will use a hand-held thermal camera to obtain a thermal profile at least once per project. No production or placement payment adjustments greater than 1.000 will be paid for any sublot that contains severe thermal segregation. Suspend operations and take immediate corrective action to eliminate severe thermal segregation unless otherwise directed. Resume operations when the Engineer determines that subsequent production will meet the requirements of this Section. Evaluate areas with severe thermal segregation by performing density profiles in accordance with Section 3077.4.9.3.3.2., "Segregation (Density Profile)." Remove and replace the material in any areas that have both severe thermal segregation and a failing result for Segregation (Density Profile) unless otherwise directed. The sublot in question may receive a production and placement payment adjustment greater than 1.000, if applicable, when the defective material is successfully removed and replaced.

4.7.3.2. **Windrow Operations**. Operate windrow pickup equipment so that when hot-mix is placed in windrows, substantially all the mixture deposited on the roadbed is picked up and loaded into the paver.

4.7.3.3. **Hauling Equipment**. Use belly dumps, live bottom, or end dump trucks to haul and transfer mixture; however, with exception of paving miscellaneous areas, end dump trucks are only allowed when used in conjunction with an MTD with remixing capability or when a thermal imaging system is used unless otherwise allowed.

4.7.3.4. **Screed Heaters**. Turn off screed heaters to prevent overheating of the mat if the paver stops for more than 5 min. The Engineer may evaluate the suspect area in accordance with Section 3077.4.9.3.3.4., "Recovered Asphalt Dynamic Shear Rheometer (DSR)," if the screed heater remains on for more than 5 min. while the paver is stopped.

4.8. **Compaction**. Compact the pavement uniformly to contain between 3.7% and 7.5% in-place air voids. Take immediate corrective action to bring the operation within 3.7% and 7.5% when the in-place air voids exceed the range of these tolerances. The Engineer will allow paving to resume when the proposed corrective action is likely to yield between 3.7% and 7.5% in-place air voids.

Obtain cores in areas placed under Exempt Production, as directed, at locations determined by the Engineer. The Engineer may test these cores and suspend operations or require removal and replacement if the in-place air voids are less than 2.7% or more than 9.0%. Areas defined in Section 3077.4.9.3.1.4., "Miscellaneous Areas," are not subject to in-place air void determination.

Furnish the type, size, and number of rollers required for compaction as approved. Use additional rollers as required to remove any roller marks. Use only water or an approved release agent on rollers, tamps, and other compaction equipment unless otherwise directed.

Use the control strip method shown in Tex-207-F, Part IV, on the first day of production to establish the rolling pattern that will produce the desired in-place air voids unless otherwise directed.

Use tamps to thoroughly compact the edges of the pavement along curbs, headers, and similar structures and in locations that will not allow thorough compaction with rollers. The Engineer may require rolling with a trench roller on widened areas, in trenches, and in other limited areas.

Complete all compaction operations before the pavement temperature drops below 160°F unless otherwise allowed. The Engineer may allow compaction with a light finish roller operated in static mode for pavement temperatures below 160°F.

Allow the compacted pavement to cool to 160°F or lower before opening to traffic unless otherwise directed. Sprinkle the finished mat with water or limewater, when directed, to expedite opening the roadway to traffic.

4.9. **Acceptance Plan**. Payment adjustments for the material will be in accordance with Article 3077.6., "Payment."

Sample and test the hot-mix on a lot and sublot basis. Suspend production until test results or other information indicates to the satisfaction of the Engineer that the next material produced or placed will result in pay factors of at least 1.000 if the production pay factor given in Section 3077.6.1., "Production Payment Adjustment Factors," for two consecutive lots or the placement pay factor given in Section 3077.6.2., "Placement Payment Adjustment Factors," for two consecutive lots is below 1.000.

4.9.1. **Referee Testing**. The Materials and Tests Division is the referee laboratory. The Contractor may request referee testing if a "remove and replace" condition is determined based on the Engineer's test results, or if the differences between Contractor and Engineer test results exceed the maximum allowable difference shown in Table 12 and the differences cannot be resolved. The Contractor may also request referee testing if the Engineer's test results require suspension of production and the Contractor's test results are within specification limits. Make the request within 5 working days after receiving test results and cores from the Engineer. Referee tests will be performed only on the sublot in question and only for the particular tests in question. Allow 10 working days from the time the referee laboratory receives the samples for test results to be reported. The Department may require the Contractor to reimburse the Department for referee tests if more than three referee tests per project are required and the Engineer's test results are closer to the referee test results than the Contractor's test results.

The Materials and Tests Division will determine the laboratory-molded density based on the molded specific gravity and the maximum theoretical specific gravity of the referee sample. The in-place air voids will be determined based on the bulk specific gravity of the cores, as determined by the referee laboratory and the Engineer's average maximum theoretical specific gravity for the lot. With the exception of "remove and replace" conditions, referee test results are final and will establish payment adjustment factors for the sublot in question. The Contractor may decline referee testing and accept the Engineer's test results when the placement payment adjustment factor for any sublot results in a "remove and replace" condition. Placement sublots subject to be removed and replaced will be further evaluated in accordance with Section 3077.6.2.2., "Placement Sublots Subject to Removal and Replacement."

4.9.2. **Production Acceptance**.

4.9.2.1. **Production Lot**. A production lot consists of four equal sublots. The default quantity for Lot 1 is 1,000 tons; however, when requested by the Contractor, the Engineer may increase the quantity for Lot 1 to no more than 4,000 tons. The Engineer will select subsequent lot sizes based on the anticipated daily production such

that approximately three to four sublots are produced each day. The lot size will be between 1,000 tons and 4,000 tons. The Engineer may change the lot size before the Contractor begins any lot.

If the optimum asphalt binder content for JMF2 is more than 0.5% lower than the optimum asphalt binder content for JMF1, the Engineer may perform or require the Contractor to perform Tex-226-F on Lot 1 to confirm the indirect tensile strength does not exceed 200 psi. Take corrective action to bring the mixture within specification compliance if the indirect tensile strength exceeds 200 psi unless otherwise directed.

4.9.2.1.1. **Incomplete Production Lots**. If a lot is begun but cannot be completed, such as on the last day of production or in other circumstances deemed appropriate, the Engineer may close the lot. Adjust the payment for the incomplete lot in accordance with Section 3077.6.1., "Production Payment Adjustment Factors." Close all lots within five working days unless otherwise allowed.

4.9.2.2. **Production Sampling**.

4.9.2.2.1. **Mixture Sampling**. Obtain hot-mix samples from trucks at the plant in accordance with Tex-222-F. The sampler will split each sample into three equal portions in accordance with Tex-200-F and label these portions as "Contractor," "Engineer," and "Referee." The Engineer will perform or witness the sample splitting and take immediate possession of the samples labeled "Engineer" and "Referee." The Engineer will maintain the custody of the samples labeled "Engineer" and "Referee" until the Department's testing is completed.

4.9.2.2.1.1. **Random Sample**. At the beginning of the project, the Engineer will select random numbers for all production sublots. Determine sample locations in accordance with Tex-225-F. Take one sample for each sublot at the randomly selected location. The Engineer will perform or witness the sampling of production sublots.

4.9.2.2.1.2. **Blind Sample**. For one sublot per lot, the Engineer will obtain and test a "blind" sample instead of the random sample collected by the Contractor. Test either the "blind" or the random sample; however, referee testing (if applicable) will be based on a comparison of results from the "blind" sample. The location of the Engineer's "blind" sample will not be disclosed to the Contractor. The Engineer's "blind" sample may be randomly selected in accordance with Tex-225-F for any sublot or selected at the discretion of the Engineer. The Engineer will use the Contractor's split sample for sublots not sampled by the Engineer.

4.9.2.2.2. **Informational Shear Bond Strength Testing.** Select one random sublot from Lot 2 or higher for shear bond strength testing. Obtain full depth cores in accordance with Tex-249-F. Label the cores with the Control Section Job (CSJ), producer of the tack coat, mix type, shot rate, lot, and sublot number and provide to the Engineer. The Engineer will ship the cores to the Materials and Tests Division or district laboratory for shear bond strength testing. Results from these tests will not be used for specification compliance.

4.9.2.2.3. **Asphalt Binder Sampling**. Obtain a 1-qt. sample of the asphalt binder witnessed by the Engineer for each lot of mixture produced. The Contractor will notify the Engineer when the sampling will occur. Obtain the sample at approximately the same time the mixture random sample is obtained. Sample from a port located immediately upstream from the mixing drum or pug mill and upstream from the introduction of any additives in accordance with Tex-500-C, Part II. Label the can with the corresponding lot and sublot numbers, producer, producer facility location, grade, district, date sampled, and project information including highway and CSJ. The Engineer will retain these samples for one year. The Engineer may also obtain independent samples. If obtaining an independent asphalt binder sample and upon request of the Contractor, the Engineer will split a sample of the asphalt binder with the Contractor.

At least once per project, the Engineer will collect split samples of each binder grade and source used. The Engineer will submit one split sample to MTD to verify compliance with Item 300, "Asphalts, Oils, and Emulsions" and will retain the other split sample for one year.

4.9.2.3. **Production Testing**. The Contractor and Engineer must perform production tests in accordance with Table 17. The Contractor has the option to verify the Engineer's test results on split samples provided by the Engineer. Determine compliance with operational tolerances listed in Table 12 for all sublots.

Take immediate corrective action if the Engineer's laboratory-molded density on any sublot is less than 95.0% or greater than 97.0% to bring the mixture within these tolerances. The Engineer may suspend operations if the Contractor's corrective actions do not produce acceptable results. The Engineer will allow production to resume when the proposed corrective action is likely to yield acceptable results.

The Engineer may allow alternate methods for determining the asphalt binder content and aggregate gradation if the aggregate mineralogy is such that Tex-236-F, Part I does not yield reliable results. Provide evidence that results from Tex-236-F, Part I are not reliable before requesting permission to use an alternate method unless otherwise directed. Use the applicable test procedure as directed if an alternate test method is allowed.

**Table 17**
**Production and Placement Testing Frequency**

| Description | Test Method | Minimum Contractor Testing Frequency | Minimum Engineer Testing Frequency |
|---|---|---|---|
| Individual % retained for #8 sieve and larger | Tex-200-F or Tex-236-F | 1 per sublot | 1 per 12 sublots[1] |
| Individual % retained for sieves smaller than #8 and larger than #200 | | | |
| % passing the #200 sieve | | | |
| Laboratory-molded density | Tex-207-F | N/A | 1 per sublot[1] |
| Laboratory-molded bulk specific gravity | | | |
| In-place air voids | | | |
| VMA | Tex-204-F | | |
| Segregation (density profile) | Tex-207-F, Part V | 1 per sublot[2] | 1 per project |
| Longitudinal joint density | Tex-207-F, Part VII | | |
| Moisture content | Tex-212-F, Part II | When directed | |
| Theoretical maximum specific (Rice) gravity | Tex-227-F | N/A | 1 per sublot[1] |
| Asphalt binder content | Tex-236-F | 1 per sublot | 1 per lot[1] |
| Hamburg Wheel test | Tex-242-F | N/A | 1 per project |
| Recycled Asphalt Shingles (RAS)[3] | Tex-217-F, Part III | N/A | |
| Thermal profile | Tex-244-F | 1 per sublot[2] | |
| Asphalt binder sampling and testing | Tex-500-C, Part II | 1 per lot (sample only)[4] | |
| Tack coat sampling and testing | Tex-500-C, Part III | N/A | |
| Boil test[5] | Tex-530-C | 1 per lot | |
| Shear Bond Strength Test[6] | Tex-249-F | 1 per project (sample only) | |

1. For production defined in Section 3077.4.9.4., "Exempt Production," the Engineer will test one per day if 100 tons or more are produced. For Exempt Production, no testing is required when less than 100 tons are produced.
2. To be performed in the presence of the Engineer, unless otherwise approved. Not required when a thermal imaging system is used.
3. Testing performed by the Materials and Tests Division or designated laboratory.
4. Obtain samples witnessed by the Engineer. The Engineer will retain these samples for one year.
5. The Engineer may reduce or waive the sampling and testing requirements based on a satisfactory test history.
6. Testing performed by the Materials and Tests Division or District for informational purposes only.

4.9.2.4. **Operational Tolerances**. Control the production process within the operational tolerances listed in Table 12. When production is suspended, the Engineer will allow production to resume when test results or other information indicates the next mixture produced will be within the operational tolerances.

4.9.2.4.1. **Gradation**. Suspend operation and take corrective action if any aggregate is retained on the maximum sieve size shown in Table 8. A sublot is defined as out of tolerance if either the Engineer's or the Contractor's test results are out of operational tolerance. Suspend production when test results for gradation exceed the operational tolerances in Table 12 for three consecutive sublots on the same sieve or four consecutive sublots on any sieve unless otherwise directed. The consecutive sublots may be from more than one lot.

4.9.2.4.2. **Asphalt Binder Content**. A sublot is defined as out of operational tolerance if either the Engineer's or the Contractor's test results exceed the values listed in Table 12. No production or placement payment

adjustments greater than 1.000 will be paid for any sublot that is out of operational tolerance for asphalt binder content. Suspend production and shipment of the mixture if the Engineer's or the Contractor's asphalt binder content deviates from the current JMF by more than 0.5% for any sublot.

4.9.2.4.3. **Voids in Mineral Aggregates (VMA)**. The Engineer will determine the VMA for every sublot. For sublots when the Engineer does not determine asphalt binder content, the Engineer will use the asphalt binder content results from QC testing performed by the Contractor to determine VMA.

Take immediate corrective action if the VMA value for any sublot is less than the minimum VMA requirement for production listed in Table 8. Suspend production and shipment of the mixture if the Engineer's VMA results on two consecutive sublots are below the minimum VMA requirement for production listed in Table 8. No production or placement payment adjustments greater than 1.000 will be paid for any sublot that does not meet the minimum VMA requirement for production listed in Table 8 based on the Engineer's VMA determination.

Suspend production and shipment of the mixture if the Engineer's VMA result is more than 0.5% below the minimum VMA requirement for production listed in Table 8. In addition to suspending production, the Engineer may require removal and replacement or may allow the sublot to be left in place without payment.

4.9.2.4.4. **Hamburg Wheel Test**. The Engineer may perform a Hamburg Wheel test at any time during production, including when the boil test indicates a change in quality from the materials submitted for JMF1. In addition to testing production samples, the Engineer may obtain cores and perform Hamburg Wheel tests on any areas of the roadway where rutting is observed. Suspend production until further Hamburg Wheel tests meet the specified values when the production or core samples fail the Hamburg Wheel test criteria in Table 11. Core samples, if taken, will be obtained from the center of the finished mat or other areas excluding the vehicle wheel paths. The Engineer may require up to the entire sublot of any mixture failing the Hamburg Wheel test to be removed and replaced at the Contractor's expense.

If the Department's or Department approved laboratory's Hamburg Wheel test results in a "remove and replace" condition, the Contractor may request that the Department confirm the results by re-testing the failing material. The Materials and Tests Division will perform the Hamburg Wheel tests and determine the final disposition of the material in question based on the Department's test results.

4.9.2.5. **Individual Loads of Hot-Mix**. The Engineer can reject individual truckloads of hot-mix. When a load of hot-mix is rejected for reasons other than temperature, contamination, or excessive uncoated particles, the Contractor may request that the rejected load be tested. Make this request within 4 hr. of rejection. The Engineer will sample and test the mixture. If test results are within the operational tolerances shown in Table 12, payment will be made for the load. If test results are not within operational tolerances, no payment will be made for the load.

4.9.3. **Placement Acceptance**.

4.9.3.1. **Placement Lot**. A placement lot consists of four placement sublots. A placement sublot consists of the area placed during a production sublot.

4.9.3.1.1. **Lot 1 Placement**. Placement payment adjustments greater than 1.000 for Lot 1 will be in accordance with Section 3077.6.2., "Placement Payment Adjustment Factors;" however, no placement adjustment less than 1.000 will be assessed for any sublot placed in Lot 1 when the in-place air voids are greater than or equal to 2.7% and less than or equal to 9.0%. Remove and replace any sublot with in-place air voids less than 2.7% or greater than 9.0%.

4.9.3.1.2. **Incomplete Placement Lots**. An incomplete placement lot consists of the area placed as described in Section 3077.4.9.2.1.1., "Incomplete Production Lot," excluding areas defined in Section 3077.4.9.3.1.4., "Miscellaneous Areas." Placement sampling is required if the random sample plan for production resulted in a sample being obtained from an incomplete production sublot.

4.9.3.1.3. **Shoulders, Ramps, Etc**. Shoulders, ramps, intersections, acceleration lanes, deceleration lanes, and turn lanes are subject to in-place air void determination and payment adjustments unless designated on the plans as not eligible for in-place air void determination. Intersections may be considered miscellaneous areas when determined by the Engineer.

4.9.3.1.4. **Miscellaneous Areas**. Miscellaneous areas include areas that typically involve significant handwork or discontinuous paving operations, such as temporary detours, driveways, mailbox turnouts, crossovers, gores, spot level-up areas, and other similar areas. Temporary detours are subject to in-place air void determination when shown on the plans. Miscellaneous areas also include level-ups and thin overlays when the layer thickness specified on the plans is less than the minimum untrimmed core height eligible for testing shown in Table 14. The specified layer thickness is based on the rate of 110 lb./sq. yd. for each inch of pavement unless another rate is shown on the plans. When "level up" is listed as part of the item bid description code, a payment adjustment factor of 1.000 will be assigned for all placement sublots as described in Article3077.6, "Payment." Miscellaneous areas are not eligible for random placement sampling locations. Compact miscellaneous areas in accordance with Section 3077.4.8., "Compaction." Miscellaneous areas are not subject to in-place air void determination, thermal profiles testing, segregation (density profiles), or longitudinal joint density evaluations.

4.9.3.2. **Placement Sampling**. The Engineer will select random numbers for all placement sublots at the beginning of the project. The Engineer will provide the Contractor with the placement random numbers immediately after the sublot is completed. Mark the roadway location at the completion of each sublot and record the station number. Determine one random sample location for each placement sublot in accordance with Tex-225-F. Adjust the random sample location by no more than necessary to achieve a 2-ft. clearance if the location is within 2 ft. of a joint or pavement edge.

Shoulders, ramps, intersections, acceleration lanes, deceleration lanes, and turn lanes are always eligible for selection as a random sample location; however, if a random sample location falls on one of these areas and the area is designated on the plans as not subject to in-place air void determination, cores will not be taken for the sublot and a 1.000 pay factor will be assigned to that sublot.

Provide the equipment and means to obtain and trim roadway cores on-site. On-site is defined as in close proximity to where the cores are taken. Obtain the cores within one working day of the time the placement sublot is completed unless otherwise approved. Obtain two 6-in. diameter cores side-by-side from within 1 ft. of the random location provided for the placement sublot. For SP-C and SP-D mixtures, 4-in. diameter cores are allowed. Mark the cores for identification, measure and record the untrimmed core height, and provide the information to the Engineer. The Engineer will witness the coring operation and measurement of the core thickness. Visually inspect each core and verify that the current paving layer is bonded to the underlying layer. Take corrective action if an adequate bond does not exist between the current and underlying layer to ensure that an adequate bond will be achieved during subsequent placement operations.

Trim the cores immediately after obtaining the cores from the roadway in accordance with Tex-251-F if the core heights meet the minimum untrimmed value listed in Table 14. Trim the cores on-site in the presence of the Engineer. Use a permanent marker or paint pen to record the lot and sublot numbers on each core as well as the designation as Core A or B. The Engineer may require additional information to be marked on the core and may choose to sign or initial the core. The Engineer will take custody of the cores immediately after witnessing the trimming of the coresand will retain custody of the cores until the Department's testing is completed. Before turning the trimmed cores over to the Engineer, the Contractor may wrap the trimmed cores or secure them in a manner that will reduce the risk of possible damage occurring during transport by the Engineer. After testing, the Engineer will return the cores to the Contractor.

The Engineer may have the cores transported back to the Department's laboratory at the HMA plant via the Contractor's haul truck or other designated vehicle. In such cases where the cores will be out of the Engineer's possession during transport, the Engineer will use Department-provided security bags and the Roadway Core Custody protocol located at http://www.txdot.gov/business/specifications.htm to provide a secure means and process that protects the integrity of the cores during transport.

Decide whether to include the pair of cores in the air void determination for that sublot if the core height before trimming is less than the minimum untrimmed value shown in Table 14. Trim the cores as described above before delivering to the Engineer if electing to have the cores included in the air void determination. Deliver untrimmed cores to the Engineer and inform the Engineer of the decision to not have the cores included in air void determination if electing to not have the cores included in air void determination. The placement pay factor for the sublot will be 1.000 if cores will not be included in air void determination.

Instead of the Contractor trimming the cores on-site immediately after coring, the Engineer and the Contractor may mutually agree to have the trimming operations performed at an alternate location such as a field laboratory or other similar location. In such cases, the Engineer will take possession of the cores immediately after they are obtained from the roadway and will retain custody of the cores until testing is completed. Either the Department or Contractor representative may perform trimming of the cores. The Engineer will witness all trimming operations in cases where the Contractor representative performs the trimming operation.

Dry the core holes and tack the sides and bottom immediately after obtaining the cores. Fill the hole with the same type of mixture and properly compact the mixture. Repair core holes with other methods when approved.

4.9.3.3. **Placement Testing**. Perform placement tests in accordance with Table 17. After the Engineer returns the cores, the Contractor may test the cores to verify the Engineer's test results for in-place air voids. The allowable differences between the Contractor's and Engineer's test results are listed in Table 12.

4.9.3.3.1. **In-Place Air Voids**. The Engineer will measure in-place air voids in accordance with Tex-207-F and Tex-227-F. Before drying to a constant weight, cores may be pre-dried using a CoreDry or similar vacuum device to remove excess moisture. The Engineer will average the values obtained for all sublots in the production lot to determine the theoretical maximum specific gravity. The Engineer will use the average air void content for in-place air voids.

The Engineer will use the vacuum method to seal the core if required by Tex-207-F. The Engineer will use the test results from the unsealed core to determine the placement payment adjustment factor if the sealed core yields a higher specific gravity than the unsealed core. After determining the in-place air void content, the Engineer will return the cores and provide test results to the Contractor.

4.9.3.3.2. **Segregation (Density Profile**). Test for segregation using density profiles in accordance with Tex-207-F, Part V when using a thermal camera instead of the thermal imaging system. Density profiles are not required and are not applicable when using a thermal imaging system. Density profiles are not applicable in areas described in Section 3077.4.9.3.1.4., "Miscellaneous Areas."

Perform a minimum of one density profile per sublot. Perform additional density profiles when any of the following conditions occur, unless otherwise approved:

- the paver stops due to lack of material being delivered to the paving operations and the temperature of the uncompacted mat before the initial break down rolling is less than the temperatures shown in Table 18;
- areas that are identified by either the Contractor or the Engineer with thermal segregation;
- any visibly segregated areas that exist.

**Table 18**
**Minimum Uncompacted Mat Temperature Requiring a Segregation Profile**

| High-Temperature Binder Grade[1] | Minimum Temperature of the Uncompacted Mat Allowed Before Initial Break Down Rolling[2,3,4] |
|---|---|
| PG 64 | <250˚F |
| PG 70 | <260˚F |
| PG 76 | <270˚F |

1. The high-temperature binder grade refers to the high-temperature grade of the virgin asphalt binder used to produce the mixture.
2. Segregation profiles are required in areas with moderate and severe thermal segregation as described in Section 3077.4.7.3.1.3.
3. Minimum uncompacted mat temperature requiring a segregation profile may be reduced 10°F if using a chemical WMA additive as a compaction aid.
4. When using WMA, the minimum uncompacted mat temperature requiring a segregation profile is 215°F.

Provide the Engineer with the density profile of every sublot in the lot within one working day of the completion of each lot. Report the results of each density profile in accordance with Section 3077.4.2., "Reporting and Responsibilities."

The density profile is considered failing if it exceeds the tolerances in Table 19. No production or placement payment adjustments greater than 1.000 will be paid for any sublot that contains a failing density profile. When a hand-held thermal camera is used instead of a thermal imaging system, the Engineer will measure the density profile at least once per project. The Engineer's density profile results will be used when available. The Engineer may require the Contractor to remove and replace the area in question if the area fails the density profile and has surface irregularities as defined in Section 3077.4.9.3.3.5., "Irregularities." The sublot in question may receive a production and placement payment adjustment greater than 1.000, if applicable, when the defective material is successfully removed and replaced.

Investigate density profile failures and take corrective actions during production and placement to eliminate the segregation. Suspend production if two consecutive density profiles fail unless otherwise approved. Resume production after the Engineer approves changes to production or placement methods.

**Table 19**
**Segregation (Density Profile) Acceptance Criteria**

| Mixture Type | Maximum Allowable Density Range (Highest to Lowest) | Maximum Allowable Density Range (Average to Lowest) |
|---|---|---|
| SP-B | 8.0 pcf | 5.0 pcf |
| SP-C & SP-D | 6.0 pcf | 3.0 pcf |

4.9.3.3.3. **Longitudinal Joint Density**.

4.9.3.3.3.1. **Informational Tests**. Perform joint density evaluations while establishing the rolling pattern and verify that the joint density is no more than 3.0 pcf below the density taken at or near the center of the mat. Adjust the rolling pattern, if needed, to achieve the desired joint density. Perform additional joint density evaluations at least once per sublot unless otherwise directed.

4.9.3.3.3.2. **Record Tests**. Perform a joint density evaluation for each sublot at each pavement edge that is or will become a longitudinal joint. Joint density evaluations are not applicable in areas described in Section 3077.4.9.3.1.4., "Miscellaneous Areas." Determine the joint density in accordance with Tex-207-F, Part VII. Record the joint density information and submit results on Department forms to the Engineer. The evaluation is considered failing if the joint density is more than 3.0 pcf below the density taken at the core random sample location and the correlated joint density is less than 90.0%. The Engineer will make independent joint density verification at least once per project and may make independent joint density

verifications at the random sample locations. The Engineer's joint density test results will be used when available.

Provide the Engineer with the joint density of every sublot in the lot within one working day of the completion of each lot. Report the results of each joint density in accordance with Section 3077.4.2., "Reporting and Responsibilities."

Investigate joint density failures and take corrective actions during production and placement to improve the joint density. Suspend production if the evaluations on two consecutive sublots fail unless otherwise approved. Resume production after the Engineer approves changes to production or placement methods.

4.9.3.3.4. **Recovered Asphalt Dynamic Shear Rheometer (DSR)**. The Engineer may take production samples or cores from suspect areas of the project to determine recovered asphalt properties. Asphalt binders with an aging ratio greater than 3.5 do not meet the requirements for recovered asphalt properties and may be deemed defective when tested and evaluated by the Materials and Tests Division. The aging ratio is the DSR value of the extracted binder divided by the DSR value of the original unaged binder. Obtain DSR values in accordance with AASHTO T 315 at the specified high temperature performance grade of the asphalt. The Engineer may require removal and replacement of the defective material at the Contractor's expense. The asphalt binder will be recovered for testing from production samples or cores in accordance with Tex-211-F.

4.9.3.3.5. **Irregularities**. Identify and correct irregularities including segregation, rutting, raveling, flushing, fat spots, mat slippage, irregular color, irregular texture, roller marks, tears, gouges, streaks, uncoated aggregate particles, or broken aggregate particles. The Engineer may also identify irregularities, and in such cases, the Engineer will promptly notify the Contractor. If the Engineer determines that the irregularity will adversely affect pavement performance, the Engineer may require the Contractor to remove and replace (at the Contractor's expense) areas of the pavement that contain irregularities. The Engineer may also require the Contractor to remove and replace (at the Contractor's expense) areas where the mixture does not bond to the existing pavement.

If irregularities are detected, the Engineer may require the Contractor to immediately suspend operations or may allow the Contractor to continue operations for no more than one day while the Contractor is taking appropriate corrective action.

4.9.4. **Exempt Production**. The Engineer may deem the mixture as exempt production for the following conditions:

- anticipated daily production is less than 500 tons;
- total production for the project is less than 5,000 tons;
- when mutually agreed between the Engineer and the Contractor; or
- when shown on the plans.

For exempt production, the Contractor is relieved of all production and placement QC/QA sampling and testing requirements, except for coring operations when required by the Engineer. The production and placement pay factors are 1.000 if the specification requirements listed below are met, all other specification requirements are met, and the Engineer performs acceptance tests for production and placement listed in Table 17 when 100 tons or more per day are produced:

- produce, haul, place, and compact the mixture in compliance with the specification and as directed;
- control mixture production to yield a laboratory-molded density that is within ±1.0% of the target laboratory-molded density as tested by the Engineer;
- compact the mixture in accordance with Section 3077.4.8., "Compaction"; and
- when a thermal imaging system is not used, the Engineer may perform segregation (density profiles) and thermal profiles in accordance with the specification.

4.9.5. **Ride Quality**. Measure ride quality in accordance with Item 585, "Ride Quality for Pavement Surfaces," unless otherwise shown on the plans.

## 5. MEASUREMENT

5.1. **Superpave Mixtures.** Hot mix will be measured by the ton of composite hot-mix, which includes asphalt, aggregate, and additives. Measure the weight on scales in accordance with Item 520, "Weighing and Measuring Equipment."

5.2. **Tack Coat.** Tack coat will be measured at the applied temperature by strapping the tank before and after road application and determining the net volume in gallons from the calibrated distributor. The Engineer will witness all strapping operations for volume determination. All tack, including emulsions, will be measure by the gallon applied.

The Engineer may allow the use of a metering device to determine the asphalt volume used and application rate if the device is accurate within 1.5% of the strapped volume.

## 6. PAYMENT

The work performed and materials furnished in accordance with this Item and measured as provided under Article 3077.5.1, "Measurement," will be paid for at the unit bid price for "Superpave Mixtures" of the mixture type, SAC, and binder specified. These prices are full compensation for surface preparation, materials, placement, equipment, labor, tools, and incidentals.

The work performed and materials furnished in accordance with this Item and measured as provided under Article 3077.5.2, "Measurement," will be paid for at the unit bid price for "Tack Coat" of the tack coat provided. These prices are full compensation for materials, placement, equipment, labor, tools, and incidentals. Payment adjustments will be applied as determined in this Item; however, a payment adjustment factor of 1.000 will be assigned for all placement sublots for "level ups" only when "level up" is listed as part of the item bid description code. A payment adjustment factor of 1.000 will be assigned to all production and placement sublots when "exempt" is listed as part of the item bid description code, and all testing requirements are met.

Payment for each sublot, including applicable payment adjustments greater than 1.000, will only be paid for sublots when the Contractor supplies the Engineer with the required documentation for production and placement QC/QA, thermal profiles, segregation density profiles, and longitudinal joint densities in accordance with Section 3077.4.2., "Reporting and Responsibilities." When a thermal imaging system is used, documentation is not required for thermal profiles or segregation density profiles on individual sublots; however, the thermal imaging system automated reports described in Tex-244-F are required.

Trial batches will not be paid for unless they are included in pavement work approved by the Department.

Payment adjustment for ride quality will be determined in accordance with Item 585, "Ride Quality for Pavement Surfaces."

6.1. **Production Payment Adjustment Factors**. The production payment adjustment factor is based on the laboratory-molded density using the Engineer's test results. The bulk specific gravities of the samples from each sublot will be divided by the Engineer's maximum theoretical specific gravity for the sublot. The individual sample densities for the sublot will be averaged to determine the production payment adjustment factor in accordance with Table 20 for each sublot using the deviation from the target laboratory-molded density defined in Table 10. The production payment adjustment factor for completed lots will be the average of the payment adjustment factors for the four sublots sampled within that lot.

**Table 20**
**Production Payment Adjustment Factors for Laboratory-Molded Density[1]**

| Absolute Deviation from Target Laboratory-Molded Density | Production Payment Adjustment Factor (Target Laboratory-Molded Density) |
|---|---|
| 0.0 | 1.075 |
| 0.1 | 1.075 |
| 0.2 | 1.075 |
| 0.3 | 1.066 |
| 0.4 | 1.057 |
| 0.5 | 1.047 |
| 0.6 | 1.038 |
| 0.7 | 1.029 |
| 0.8 | 1.019 |
| 0.9 | 1.010 |
| 1.0 | 1.000 |
| 1.1 | 0.900 |
| 1.2 | 0.800 |
| 1.3 | 0.700 |
| > 1.3 | Remove and replace |

1. If the Engineer's laboratory-molded density on any sublot is less than 95.0% or greater than 97.0%, take immediate corrective action to bring the mixture within these tolerances. The Engineer may suspend operations if the Contractor's corrective actions do not produce acceptable results. The Engineer will allow production to resume when the proposed corrective action is likely to yield acceptable results.

6.1.1. **Payment for Incomplete Production Lots**. Production payment adjustments for incomplete lots, described under Section 3077.4.9.2.1.1., "Incomplete Production Lots," will be calculated using the average production pay factors from all sublots sampled.

A production payment factor of 1.000 will be assigned to any lot when the random sampling plan did not result in collection of any samples within the first sublot.

6.1.2. **Production Sublots Subject to Removal and Replacement**. If after referee testing, the laboratory-molded density for any sublot results in a "remove and replace" condition as listed in Table 20, the Engineer may require removal and replacement or may allow the sublot to be left in place without payment. The Engineer may also accept the sublot in accordance with Section 3077.5.3.1., "Acceptance of Defective or Unauthorized Work." Replacement material meeting the requirements of this Item will be paid for in accordance with this Section.

6.2. **Placement Payment Adjustment Factors**. The placement payment adjustment factor is based on in-place air voids using the Engineer's test results. The bulk specific gravities of the cores from each sublot will be divided by the Engineer's average maximum theoretical specific gravity for the lot. The individual core densities for the sublot will be averaged to determine the placement payment adjustment factor in accordance with Table 21 for each sublot that requires in-place air void measurement. A placement payment adjustment factor of 1.000 will be assigned to the entire sublot when the random sample location falls in an area designated on the plans as not subject to in-place air void determination. A placement payment adjustment factor of 1.000 will be assigned to quantities placed in areas described in Section 3077.4.9.3.1.4., "Miscellaneous Areas." The placement payment adjustment factor for completed lots will be the average of the placement payment adjustment factors for up to four sublots within that lot.

**Table 21**
**Placement Payment Adjustment Factors for In-Place Air Voids**

| In-Place Air Voids | Placement Payment Adjustment Factor | In-Place Air Voids | Placement Payment Adjustment Factor |
|---|---|---|---|
| < 2.7 | Remove and Replace | 5.9 | 1.048 |
| 2.7 | 0.710 | 6.0 | 1.045 |
| 2.8 | 0.740 | 6.1 | 1.042 |
| 2.9 | 0.770 | 6.2 | 1.039 |
| 3.0 | 0.800 | 6.3 | 1.036 |
| 3.1 | 0.830 | 6.4 | 1.033 |
| 3.2 | 0.860 | 6.5 | 1.030 |
| 3.3 | 0.890 | 6.6 | 1.027 |
| 3.4 | 0.920 | 6.7 | 1.024 |
| 3.5 | 0.950 | 6.8 | 1.021 |
| 3.6 | 0.980 | 6.9 | 1.018 |
| 3.7 | 1.000 | 7.0 | 1.015 |
| 3.8 | 1.015 | 7.1 | 1.012 |
| 3.9 | 1.030 | 7.2 | 1.009 |
| 4.0 | 1.045 | 7.3 | 1.006 |
| 4.1 | 1.060 | 7.4 | 1.003 |
| 4.2 | 1.075 | 7.5 | 1.000 |
| 4.3 | 1.075 | 7.6 | 0.980 |
| 4.4 | 1.075 | 7.7 | 0.960 |
| 4.5 | 1.075 | 7.8 | 0.940 |
| 4.6 | 1.075 | 7.9 | 0.920 |
| 4.7 | 1.075 | 8.0 | 0.900 |
| 4.8 | 1.075 | 8.1 | 0.880 |
| 4.9 | 1.075 | 8.2 | 0.860 |
| 5.0 | 1.075 | 8.3 | 0.840 |
| 5.1 | 1.072 | 8.4 | 0.820 |
| 5.2 | 1.069 | 8.5 | 0.800 |
| 5.3 | 1.066 | 8.6 | 0.780 |
| 5.4 | 1.063 | 8.7 | 0.760 |
| 5.5 | 1.060 | 8.8 | 0.740 |
| 5.6 | 1.057 | 8.9 | 0.720 |
| 5.7 | 1.054 | 9.0 | 0.700 |
| 5.8 | 1.051 | > 9.0 | Remove and Replace |

6.2.1. **Payment for Incomplete Placement Lots**. Payment adjustments for incomplete placement lots described under Section 3077.4.9.3.1.2., "Incomplete Placement Lots," will be calculated using the average of the placement pay factors from all sublots sampled and sublots where the random location falls in an area designated on the plans as not eligible for in-place air void determination.

If the random sampling plan results in production samples, but not in placement samples, the random core location and placement adjustment factor for the sublot will be determined by applying the placement random number to the length of the sublot placed.

If the random sampling plan results in placement samples, but not in production samples, no placement adjustment factor will apply for that sublot placed.

A placement payment adjustment factor of 1.000 will be assigned to any lot when the random sampling plan did not result in collection of any production samples.

6.2.2. **Placement Sublots Subject to Removal and Replacement**. If after referee testing, the placement payment adjustment factor for any sublot results in a "remove and replace" condition as listed in Table 21, the Engineer will choose the location of two cores to be taken within 3 ft. of the original failing core location. The Contractor will obtain the cores in the presence of the Engineer. The Engineer will take immediate possession of the untrimmed cores and submit the untrimmed cores to the Materials and Tests Division,

where they will be trimmed, if necessary, and tested for bulk specific gravity within 10 working days of receipt.

The bulk specific gravity of the cores from each sublot will be divided by the Engineer's average maximum theoretical specific gravity for the lot. The individual core densities for the sublot will be averaged to determine the new payment adjustment factor of the sublot in question. If the new payment adjustment factor is 0.700 or greater, the new payment adjustment factor will apply to that sublot. If the new payment adjustment factor is less than 0.700, no payment will be made for the sublot. Remove and replace the failing sublot, or the Engineer may allow the sublot to be left in place without payment. The Engineer may also accept the sublot in accordance with Section 3077.5.3.1., "Acceptance of Defective or Unauthorized Work." Replacement material meeting the requirements of this Item will be paid for in accordance with this Section.

6.3. **Total Adjusted Pay Calculation**. Total adjusted pay (TAP) will be based on the applicable payment adjustment factors for production and placement for each lot.

$TAP = (A+B)/2$

where:
$A$ = Bid price × production lot quantity × average payment adjustment factor for the production lot
$B$ = Bid price × placement lot quantity × average payment adjustment factor for the placement lot + (bid price × quantity placed in miscellaneous areas × 1.000)

*Production lot quantity* = Quantity actually placed - quantity left in place without payment

*Placement lot quantity* = Quantity actually placed - quantity left in place without payment - quantity placed in miscellaneous areas